NORTH AMERICAN FLYBALL ASSOCIATION, INC.®

OFFICIAL RULES OF RACING, CORPORATE POLICIES AND BY-LAWS

October 1, 2026

Version 1

Copyright January 1985 through 1991 by Michael F. Randall, Revised 1992 through 2026, by the North American Flyball Association, Inc.® All rights reserved. No part of this publication may be reproduced or transmitted in any form or by any means without permission from the North American Flyball Association, Inc.®, except by a reviewer who wishes to quote brief passages in connection with a review for the inclusion in a magazine, newspaper, broadcast or for the purpose of training students under their direction.

NAFA®, the NAFA logo and North American Flyball Association® are registered trademarks of NAFA, Inc.

Flyball got its start in the 1970's when Californian Herbert Wagner developed the first tennis ball launcher. Subsequently, the new sport for dog enthusiasts was introduced in the Toronto - Detroit area by several dog training clubs. After a few small tournaments were held in conjunction with dog shows, the first ever flyball tournament was held in 1983.

Flyball races match two teams of four dogs each, racing side-by-side over a 51 foot long course. Each dog must run in relay fashion down the jumps, trigger a flyball box, releasing the ball, retrieve the ball, and return over the jumps. The next dog is released to run the course but can't cross the start/finish line until the previous dog has returned over all 4 jumps and reached the start/finish line. The first team to have all 4 dogs finish the course without error wins the heat.

To standardize the rules, keep records of tournaments, and guide the development of flyball racing, the North American Flyball Association, Inc.® (**NAFA®**) was formed in 1985 by a group representing 12 teams from Michigan and Ontario. Interest and participation in flyball has soared since its beginning and is now enjoyed throughout North America, Europe, Australia, and other countries. NAFA® has over 1,000 registered clubs (280 active) with more than 33,000 registered dogs (over 4,300 active).

Flyball races offer fast paced action with plenty of excitement for dogs, handlers, and especially spectators. Many teams run all 4 dogs through the course in less than 20 seconds while the NAFA® record is less than 15 seconds. NAFA® tournaments are divided into divisions so that teams compete against other teams of equal abilities. All dogs including mixed breeds are eligible to compete and earn titles in NAFA® sanctioned tournaments. Titles are earned via a point system based on the time it takes a dog’s team to complete each heat race.

The NAFA® Rules and Policies document consists of the Rules of Racing, the Corporate Policies and Procedures, and NAFA® By-laws for flyball racing at NAFA® sanctioned tournaments

<u>List of Changes for the 2026 Racing Year</u>

1) **Section 8.4- Aggressive Dogs**

   a) Added “It is the judge’s discretion to evaluate the context of the situation and make an appropriate determination.”

2) **Glossary**

   a) Updated the definition of “Good Standing”

3) **Section 2.2- NAFA Approved Judges**

   a) Added “, within one (1) NAFA racing year:” to the Loss of status due to lack of judging assignments

4) **Section 5.7- Probation**

   a) Section title updated to “Section 5.7- Probation and Suspension”

   b) Entire section was updated to define the difference between a probation and a suspension and define what results in a club or individual being placed on probation or suspension

5) **Section 6.1- Requirements**

   a) Updated (m) to reflect updated requirements for electronic submission of tournament results and remove information pertaining to results not submitted electronically

   b) Updated (n) with updated information on timing and penalty fees and/or additional punishment for late submission of tournament results

6) **Form C.6**

   a) Edits made to Form C.6 for overall clarity and consistency

Table of Contents

RULES OF RACING (RR) 1

CHAPTER 1 – EQUIPMENT 2
Section 1.1 - Flyball Boxes 2
Section 1.2 - Balls 3
Section 1.3 – Collars and leads 3

CHAPTER 2 - RING SET-UP 4
Section 2.1 - Footing 4
Section 2.2 - Barriers 4
Section 2.3 - Jumps 5
Section 2.4 - Ring Layout 6

CHAPTER 3 – DOGS, TEAMS, AND TIME SHEETS 7
Section 3.1 – Dog Registration (CRNs) 7
Section 3.2 – Clubs, Teams, Time Sheets, and Warm-up Only 7

CHAPTER 4 - MEASURING 9
Section 4.1 – Measuring Process 9
Section 4.2 – NAFA® Recorded Measurements 11
Section 4.3 –Mandatory Measuring 12
Section 4.4 – Permanent Measurements 12
Section 4.5 – Owner Initiated Remeasure (OIR) Process 13

CHAPTER 5 - JUDGES 14

CHAPTER 6 - REPORTING FOR RACES 15

CHAPTER 7 - WARM-UPS 18

CHAPTER 8 - RULES OF RACING 18
Section 8.1 - Tournament Seeding/Breakout Rule 18
Section 8.2 - Jump Heights 19
Section 8.3 - The Heat 19
Section 8.4 - Aggressive Dogs 22
Section 8.5 - Dogs and Handlers with Disabilities, Condition of Dog 22
Section 8.6 - Race Results 23
Section 8.7 - Racing without the Electronic Judging System (EJS) 23

GLOSSARY 25

CORPORATE POLICIES & PROCEDURES (CP&P) 28

CHAPTER 1 – EXECUTIVE DIRECTOR STAFF 29
Section 1.1 – Statistician 29
Section 1.2 – Tournament Sanctioning Secretary 29
Section 1.3 – Webpage 29
Section 1.4 – EJS Coordinator 29
Section 1.5 – Webmaster 29
Section 1.6 – Regional Directors 30

CHAPTER 2 – JUDGES 31
Section 2.1 – Head Judges 31
Section 2.2 – NAFA® Approved Judges 32
Section 2.3 – Measuring Official Status 33
Section 2.4 – NAFA® Supervising Judges 35

CHAPTER 3 – ANNUAL GENERAL MEETING 36

CHAPTER 4 – DELEGATE VOTES 36

CHAPTER 5 – CODE OF CONDUCT 37
Section 5.1 – Code of Ethics 37
Section 5.2 – Discipline 38
Section 5.3 - Pre-hearing 38
Section 5.4 - Hearing 39
Section 5.5 - Post-Hearing 40
Section 5.6 - Appeal 40
Section 5.7 – Probation and Suspension 41
Section 5.8 - Aggressive Dogs 42
Section 5.9 – Publishing of Disciplinary Action 43

CHAPTER 6 – HOSTING A NAFA® SANCTIONED EVENT 44
Section 6.1 – Requirements 44
Section 6.2 - Classes of Competition 47
Section 6.3 – Format & Schedule 48
Section 6.4 - Seeding 49
Section 6.5 – Electronic Judging Systems 49

CHAPTER 7 – STANDING RULES OF COMPETITION 50
Section 7.1 – World Record Times 50
Section 7.2 – Racing Year 52
Section 7.3 – Meaningless Heats 52
Section 7.4 – Changing Clubs 52
Section 7.5 – Penalties for Ineligible Dogs Running 52
Section 7.6 – Breed Challenge Process 53

CHAPTER 8 – AWARDS **55**
Section 8.1 – Points 55
Section 8.2 –Titles 55
Section 8.3 – Iron Dog Award 56
Section 8.4 - Regional Champions 56
Section 8.5 – NAFA® Champions 58
Section 8.6 – Clyde Moore Memorial Hall of Fame 59
Section 8.7 – Regional MVP Award 59
Section 8.8 – Judge of the Year Award 60
Section 8.9 – Regional Overall Club (ROC) Champions 60

CHAPTER 9 – Conflict of Interest Policy **63**
Section 9.1 – Board of Directors 63
Section 9.2 – Regional Directors 63
Section 9.3 – Representing NAFA® 63

BYLAWS 64

ARTICLE I - OFFICES **65**

ARTICLE II - PURPOSE **65**

ARTICLE III - MEMBERSHIP **65**

ARTICLE IV - BOARD OF DIRECTORS **65**
Section 1. Powers. 65
Section 2. Number. 65
Section 3. Eligibility. 65
Section 4. Election of Directors. 65
Section 5. Term of Office. 66
Section 6. Vacancies. 66
Section 7. Annual Meeting. 66
Section 8. Regular Meetings. 66
Section 9. Special Meetings. 66
Section 10. Open Meetings. 66
Section 11. Notice: Waiver of Notice. 66
Section 12. Quorum and Vote at Meetings. 66
Section 13. Executive Session. 67
Section 14. Telephone Meetings. 67
Section 15. Action by Unanimous Consent. 67
Section 16. Resignation and Removal of Directors. 67
Section 17. Compensation and Reimbursement. 67
Section 18. Minutes. 67
Section 19. Conduct of Meetings. 67

ARTICLE V - COMMITTEES OF DIRECTORS 68
Section 2. Standing Committees. 68
Section 3. Tenure. 69
Section 4. Meeting and Notices. 69
Section 5. Quorum. 69
Section 6. Action By Unanimous Consent and Telephone Meetings. 69
Section 7. Removal and Resignations. 69
Section 8. Vacancies. 69
Section 9. Reports. 69

ARTICLE VI - OFFICERS 70
Section 1. Positions. 70
Section 2. Election, Term of Office and Vacancies. 70
Section 3. Chairperson of the Board. 70
Section 4. Executive Director. 70
Section 5. Vice-Chairperson. 70
Section 6. Secretary. 71
Section 7. Treasurer. 71
Section 8. Bond. 71
Section 9. Authority for Expenditures. 71
Section 10. Indemnification. 71

ARTICLE VII - AFFILIATE CLUBS AND DELEGATES 72
Section 1. Local Organizations. 72
Section 2. Delegate Vote Calculations. 72
Section 3. Rules Governing Delegate Voting. 73
Section 4. Annual General Meeting. 73
Section 5. Delegate Action. 73

ARTICLE VIII - GENERAL PROVISIONS 73
Section 1. Seal. 73
Section 2. Fiscal Year. 73
Section 3. Legal Construction. 73

ARTICLE IX - AMENDMENTS TO BYLAWS 74

NORTH AMERICAN FLYBALL ASSOCIATION, INC. ®

RULES OF RACING (RR)

CHAPTER 1 – EQUIPMENT

Section 1.1 - Flyball Boxes

(a) Each team shall supply a flyball box.

(b) All boxes are to have a mechanical (not electrical) mechanism.

(c) The boxes may be painted or decorated as the team wishes.

(d) The ball, when released, must have a free unobstructed flight of not less than 24 inches from the point that the ball is released, in the direction of the start/finish line from all holes.

(e) Boxes:

(i) Shall not exceed 36 inches in width, nor 24 inches in height from the bottom surface of the box excluding mat grabbing devices/materials and outdoor staking devices;
(ii) The body of the box shall not exceed 36 inches in depth;
(iii) The base of the box upon which the box loader stands may exceed 36 inches in depth;
(iv) Mat grabbing devices/materials shall not raise the box by more than one half inch;
(v) The box shall not exceed these dimensions at any time during the heat (including any attachments to the box, e.g. carrying handles, cocking devices, or flaps/shields/wings). The box loader may not change the configuration of the box during the heat except as needed to load the ball or to straighten the box if it has shifted during the heat. If the box exceeds these dimensions at any time during the heat the team shall be awarded a “No Finish”. Judges have the discretion to declare a box unsafe and therefore not usable.

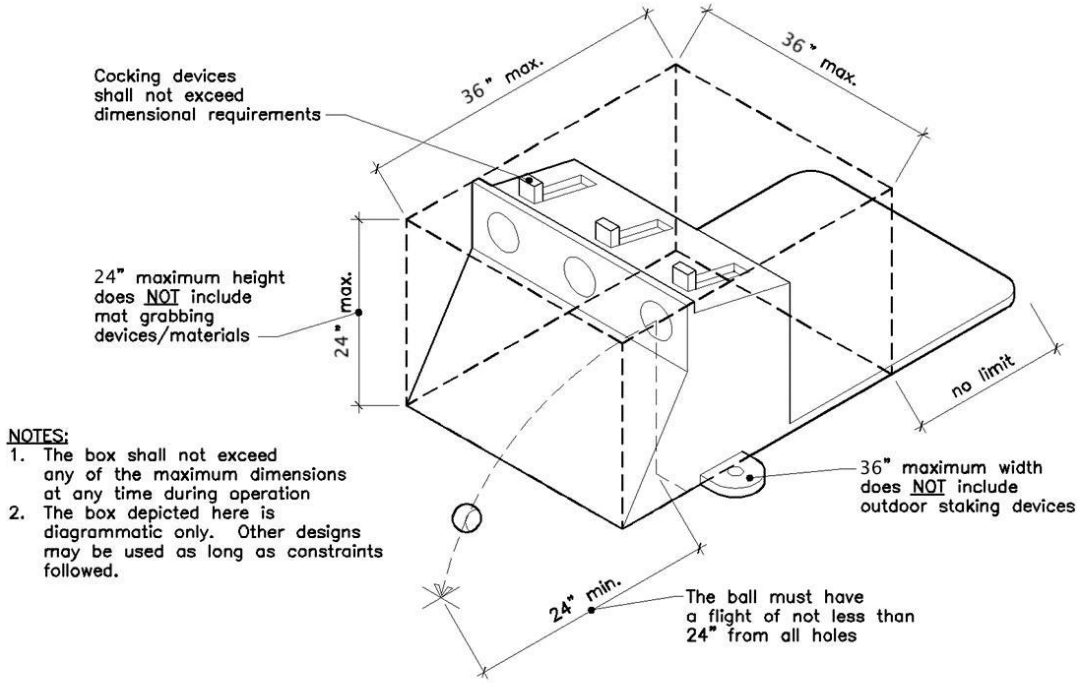

Section 1.2 - Balls

Each club shall have a supply of round balls subject to the size, safety, and comfort of the dogs. Approved balls, to be retrieved from the box, may be any color, must bounce when dropped onto a hard surface, must roll, and must perform as required per Section 1.1 – Flyball Boxes (d) (RR). Balls may not contain a noise maker, e.g. bells or squeakers.

Section 1.3 – Collars and leads

(a) Non-slip collars (e.g. flat), limited slip collars (e.g. martingale) and non-restrictive harnesses without chain are the only accepted types of collars to be used in navigating the course during racing or warm-ups.

(b) Head halters (e.g. Haltees or Gentle Leaders) are permitted in the ring, however, they may not be used in navigating the course during racing or warm-ups.

(c) Limited slip and slip collars containing chain, and retractable leads are forbidden in the ring.

(d) Competitors are forbidden to use electronic, electronic dummy collars, and pinch/prong collars on the tournament grounds. The tournament grounds include racing lanes, spectator areas, and the crating area.

It is noted that it is impossible to control spectators using prong collars or other unapproved devices on their dogs who are not part of the tournament.

Permissible Collar and Lead Types at Tournaments			
Type of Collar/Lead	**Navigating the course**	**Into the Ring**	**On Grounds**
Non-slip e.g. flat	Yes	Yes	Yes
Limited Slip (no chain) e.g. martingale	Yes	Yes	Yes
Non-restrictive Harness (no chain)	Yes	Yes	Yes
Head Halters	No	Yes	Yes
Slip (no chain)	No	Yes	Yes
Limited Slip (with chain) e.g. martingale	No	No	Yes
Slip (with chain) e.g. choke chain	No	No	Yes
Retractable Leads	No	No	Yes
Electronic	No	No	No
Dummy	No	No	No
Pinch/Prong	No	No	No

CHAPTER 2 - RING SET-UP

Section 2.1 - Footing

The host club shall provide adequate non-slip footing on the racing lane, at the box, and at the start.

Section 2.2 - Barriers

The host club shall provide a barrier/backstop at the box end of the run, placed as to prevent missed balls from rolling too far but placed as not to prevent proper observation by the judge or to obscure the spectators' view. A barrier (minimum 24" high) shall extend between the boxes, up to 3 feet in front of the box placement line, and a minimum of 5 feet behind the box placement line.

Section 2.3 - Jumps

(a) The host club shall provide two sets of regulation flyball jumps for the duration of the tournament.

(i) The jumps shall be white except for the uprights, which may be any color. The jumps shall have an inside width of 24 inches or 30 inches, with uprights not more than 36 inches high nor less than 24 inches high. Logos and/or lettering on the baseboard is permitted and shall be sized such that there remains a white border no less than one inch in width inside of each upright and on the top and bottom of the baseboard. All jumps shall be either 24 inches, or all jumps shall be 30 inches for the entirety of the event.

(ii) NAFA® requires all 1” and 2” jump boards be no thicker than ½” plywood, SINTRA®, or similar approved material. All edges must be “eased” or rounded over so no sharp edges are present.

(iii) NAFA requires that a 1" board be the topmost board for all jump heights.

(iv) Jump slats made of any material that are broken or bent must be removed from competition.

(v) Jumps shall be within ¼” in tolerance for height.

(b) There shall be a distance of six feet from the start/finish line to the first jump; ten (10) feet between each jump (four total), and 15 feet from the last jump to the box placement line.

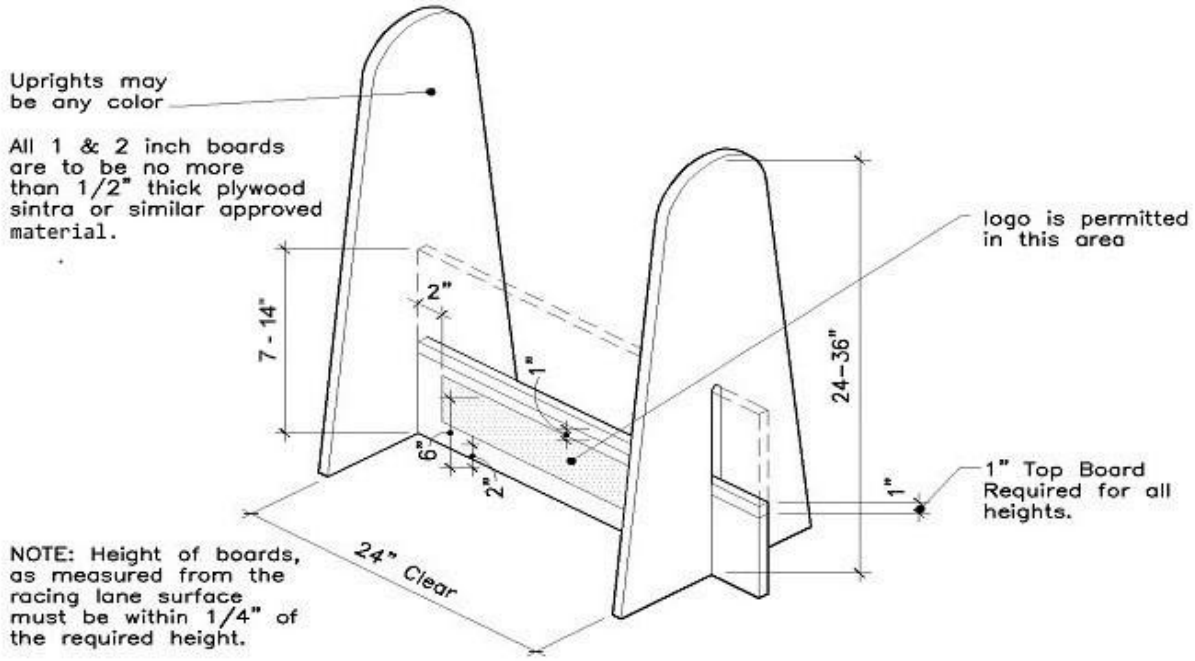

Section 2.4 - Ring Layout

(a) The minimum area required for two regulation lanes is approximately 30 feet by 110 feet. There shall be two racing lanes set a minimum of 12 feet from center to center and a maximum of 17 feet center to center. In cases of racing lanes being placed on hard surfaces or carpet (such as indoor/outdoor carpet where rug burns are possible), each racing lane shall be matted at a minimum 4.5 feet on either side of the racing lane center line for the length of the racing lane leading up to the first jump and an area from the last jump to the backstops. Where sod, dirt, grass or similar surfaces are available, matting shall not be required. All racing surfaces must be free of apparent contaminants. The length of the racing lane shall include an area not less than 50 feet leading up to the start/finish line and an area behind the box line and in front of the backstops to a minimum of 5 feet and that the backstops may protrude up to 3 feet in front of the box line. For tournaments held in venues that will not accommodate 50 feet of runback, the tournament director may apply for an exception from the Executive Director if adequate notice is given to teams and appropriate safety measures are put in place. If the Executive Director grants an exception, the tournament will not qualify for regional points or regional overall club championship placements.

(b) No equipment or other items may be between the racing lanes from the backstop to the start/finish line except those needed for utilizing the electronic judging system.

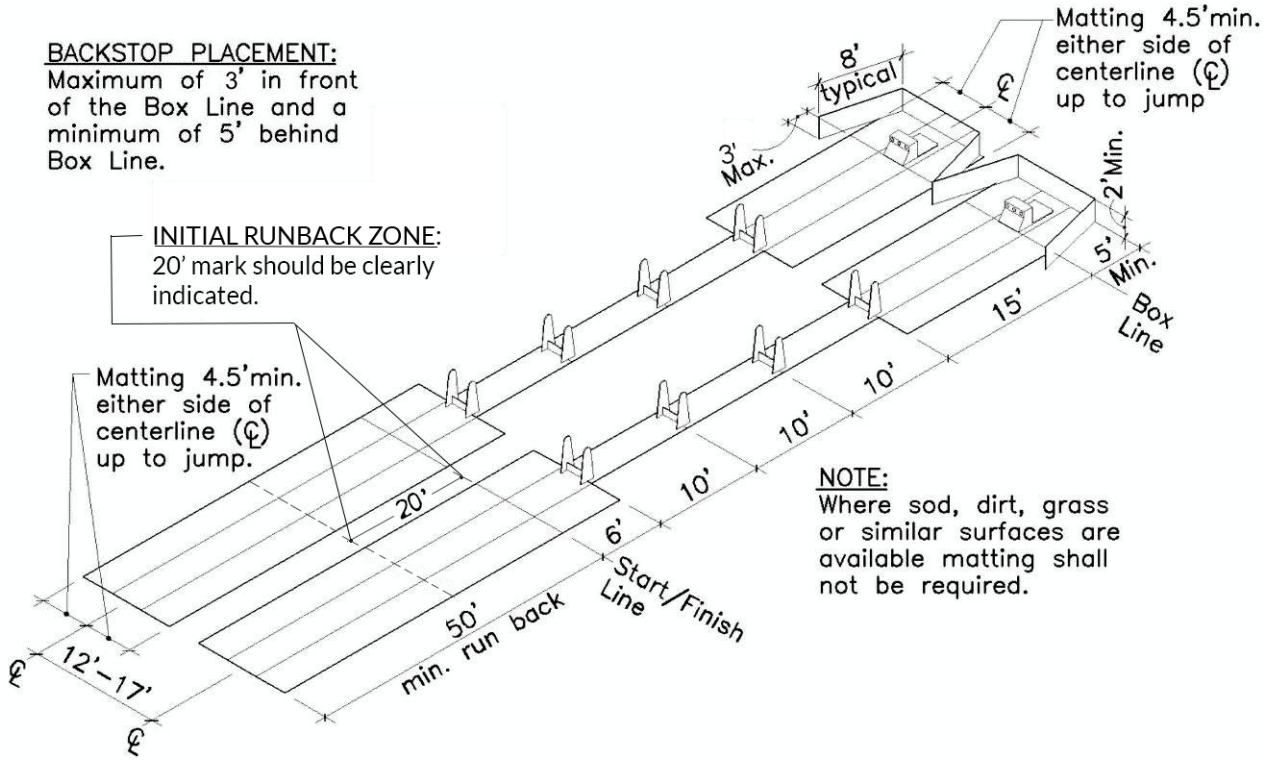

CHAPTER 3 – DOGS, TEAMS, AND TIME SHEETS

Section 3.1 – Dog Registration (CRNs)

(a)**Obtaining a CRN.** A Competition Racing Number (CRN) must be obtained from NAFA® (use NAFA Form C.8 or the online registration form on the NAFA webpage) before the dog competes or warms up at a NAFA sanctioned tournament. The current fee for a CRN is shown in Appendix A. The CRN is not transferable to another dog.

(b)**Identification of breed.** The CRN shall identify the breed of the dog or declare the dog a mixed breed. If a breed is claimed, it must be a breed recognized by one or more of the following kennel clubs: American Kennel Club (including Foundation Stock Service), Canadian Kennel Club, United Kennel Club, Mexican Kennel Club, American Rare Breed Association, or American Herding Breed Association. Varieties listed in the NAFA database as of August 25, 2018, will continue to be recognized as separate breeds. New varieties will not be listed as breeds. A dog's breed is subject to challenge as provided in section 7.6 of the Corporate Policies and Procedures. A dog's breed designation may be changed at the owner's request once in the lifetime of the dog unless the breed designation has already been changed as a result of a breed challenge.

(c)**Penalty for no CRN.** Any dog listed on a time sheet in a NAFA sanctioned tournament without a valid CRN will result in forfeiture of tournament placement for the team as well as forfeiture of all NAFA points earned during the tournament by that team for all dogs entered on the time sheet.

Section 3.2 – Clubs, Teams, Time Sheets, and Warm-up Only

Clubs

(a) **Club number.** A club must have a NAFA® club number to enter a team in a NAFA sanctioned event. To obtain a club number use NAFA Form C.11.

(b) **Penalty for no club number.** If a club number has not been obtained prior to the closing date of the tournament in which the club has entered, the teams entered by the club will forfeit all NAFA points and tournament placements.

Teams

(c) Each team is to consist of the following:

(i) a minimum of four dogs and four handlers, with a maximum of six dogs and six handlers;
(ii) a box loader;
(iii) at the discretion of the team, a runner or two, to pick up loose tennis balls, to set up knocked down jumps, or to otherwise assist the team, provided doing so does not interfere with the judges or the opposing team.

(d) **Children.** Children who are too young to be able to participate safely (e.g. children in

strollers, car seats, baby carriers or being held in a person's arms) are not permitted in the ring during racing or warm-up periods.

(e) **Substitutions.** Each team is to have four dogs running in each heat, with a maximum of two alternates as standbys. The alternate(s) may be used at the team's discretion. Substitutions may only be made at the end of each heat.

Time Sheets

(f) **Submitting time sheets.** A current time sheet (NAFA Form C.2) shall be completed and provided to the Tournament Secretary before the start of racing, to include team name, club number, captain, CRNs, and dog names.

(g) **Minimum age for dogs.** No dog under the age of fifteen (15) months may be listed on a time sheet in a sanctioned event.

(h) **Changes to listed dogs.** Each dog on the time sheet, including alternate and warm-up, must be listed prior to the first race of the division. Once the division has begun, dogs listed on the time sheet may not be changed on the time sheet.

(i) **Double listing.** A dog may be listed on two time sheets per day unless:

(i) All entries received for a tournament's limited entry regular class were not accepted at the conclusion of the automated draw.
(ii) The time sheets are in the same class of competition.
(iii) The dog is listed on a time sheet in Veterans Class. A dog listed on a time sheet in the Veterans Class at a tournament may not be listed on a time sheet for any other class of competition in that tournament unless the classes are scheduled so as to be run on separate days to a maximum of one additional class.
(iv) The dog is listed on a time sheet for warm-up only.

(j) **Time sheet missing jump height.** Failure to record a jump height for a dog on the C.2 time sheet alone does not trigger the penalty specified in Section 7.5 – Penalties for Ineligible Dogs Running (CP&P) and does not require forfeiting of the heats.

Warm-up Only

(k) In addition to the six dogs listed, each time sheet (C.2 Form) may have one dog listed for warm-up only. A dog listed for warm-up only:

(i) **must have a valid CRN and meet the minimum age requirement** *as specified in Section 3.2 – Clubs, Teams, Time Sheets, and Warm-up Only (g) (RR)*;
(ii) **cannot be double listed.** The dog cannot be listed on any other C.2 form for that event.
(iii) **does not need to be on the team's club or meet the requirements of the class**;
(iv) **will get a penalty for running a heat.** The dog may participate during the warm-up period and/or practice start only. The dog shall not run in a heat; doing so will result in a loss and be recorded as forfeiture of the race.

(l) A dog participating in a warm-up that is not listed on the C.2 form (and is not listed on any other C.2 form for the tournament) will result in forfeiture of the race.

CHAPTER 4 - MEASURING

Section 4.1 – Measuring Process

When and Where Measuring Takes Place

(a)Dogs shall be measured at events during times designated by the host club.

(b)The measurement area will be determined by the Measuring Official, who shall select an appropriate Measuring Surface. A suitable raised Measuring Surface (such as a table) must be available for the measurement; the handler has the option of using the raised surface or the ground for the measurement.

(c)If the Measuring Official determines that an appropriate Measuring Surface or a NAFA Measuring Apparatus is not available, the NAFA Recorded Measurements shall be designated as 'For Event Only' on the C.9 Jump Heights Form.

(d)Measurements are to be open to public observation.

Who Measures

(e)The host club shall designate a measuring official for the tournament. The Measuring Official should be stated in the sanctioning before the closing date. The designated Measuring Official is the only judge permitted to measure dogs for NAFA Recorded Measurements (other than those designated 'For MO Training/Certification Only') at the tournament. An exception for this is detailed in Section 4.5 - Obtaining a Permanent Measurement (c)(iii) (CP&P).

(f)Only one (1) handler per dog shall be allowed in the measuring area.

(g)Judges measuring must have measuring official status.

How to Measure

(h)**Calibration.** Prior to measuring the first dog, and any time it is moved, the NAFA Measuring Apparatus shall be calibrated to ensure accuracy.

(i)**Proper stance.** The dog's height is the distance from the Measuring Surface to the top of the withers with the dog standing in an upright position as indicated by Illustration 4.1. The handler may steady the dog if necessary but shall not physically support the dog during the measuring process. The following criteria are part of an acceptable stand:

(i)The front legs will be vertical, so as to be able to draw a line perpendicular to the ground that runs from the withers to the point of the elbow and follows the rear of the leg to the floor.

(ii)The dog's head must be in an upright position with the dog's jaw line parallel to the floor.

(iii)The back legs will be positioned with the hocks perpendicular to the ground and spread no wider than the width of the dog as shown in Illustration 4.1.

Illustration 4.1 - Dog standing properly to be measured

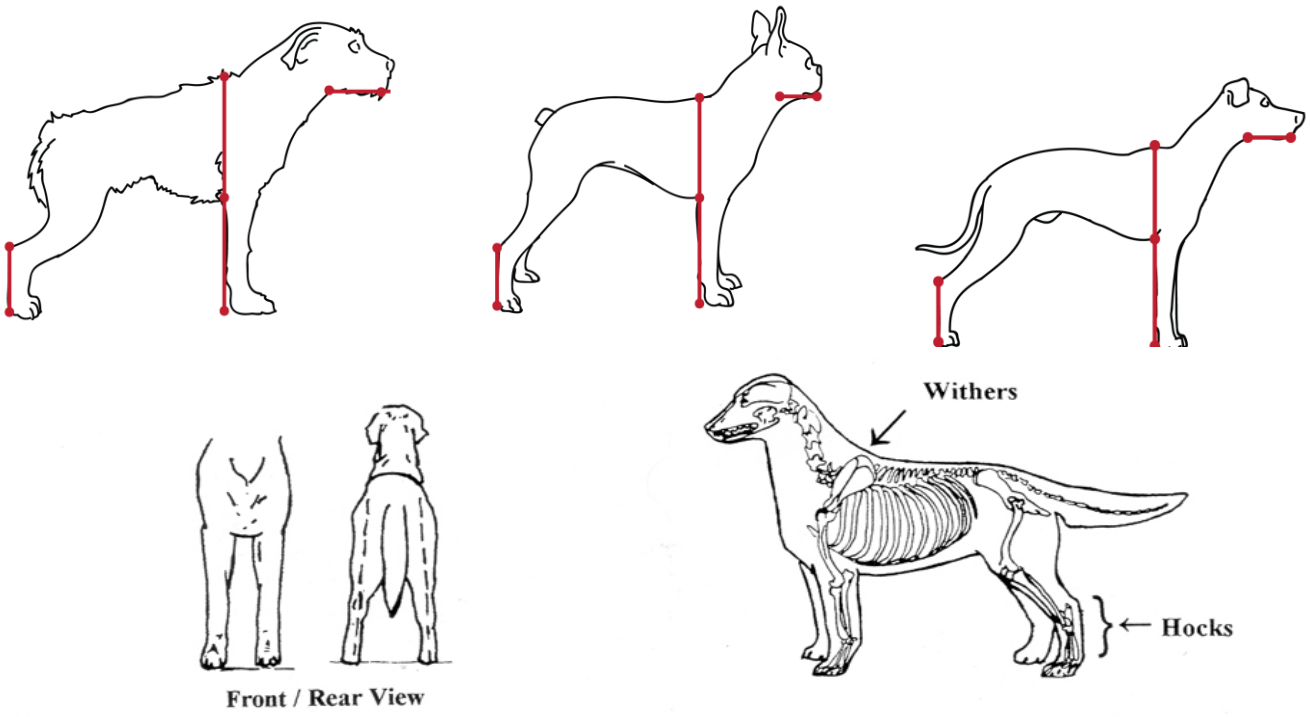

(j)**Number of attempts.** The dog is entitled to receive up to 3 measurements, attempts, or combinations thereof. The dog must be presented in an acceptable stand (as described in paragraph 4.1(i) and in Illustration 4.1 above), within a reasonable period of time, not to exceed five minutes per attempt.

(k)**Aggression.** Aggression during measurement will not be tolerated and Section 8.4 – Aggressive Dogs (RR) will be observed.

(l)**All attempts by same Measuring Official.** In cases where multiple Measuring Officials are measuring, if a competitor wishes to obtain more than one measurement, attempt, or combination thereof, all measurements/attempts must be with the same Measuring Official.

(m)The dog's height will be determined by measuring from the calibrated laser line to the top of the withers.

(n)NAFA reserves the right to require a dog to be measured for cause.

Section 4.2 – NAFA® Recorded Measurements

(a)A dog must be at least 15 months old and have a valid CRN to have its height recorded on the tournament Jump Height C.9 form.

(b)A dog deemed to be "NOT MEASUREABLE" by the Measuring Official, may not be the Height Dog.

(c)For NAFA Recorded Measurements, the Measuring Official and Regional Director should work together to ensure:

(i)the NAFA Measuring Apparatus is calibrated;
(ii)the measurement is accurate;
(iii)the stance is in accordance with Section 4.1 – Measuring Process (i) (CP&P);
(iv)there is no conflict of interest, or appearance of conflict of interest. In order to avoid the appearance of impropriety, whenever a conflict of interest or perceived conflict of interest occurs between the owner/handler and the Measuring Official, measurements shall be video recorded and sent to NAFA for approval. Examples of conflicts of interest include, but are not limited to: family members, same flyball club, or other close relationship. If videos are not approved, the measurement shall be recorded as "for event only."

(d)If a Measuring Official is concerned about any perceived conflict of interest, they shall submit a video recording of the measurement to NAFA for review.

(e)After the measuring process, defined in Section 4.1 – Measuring Process (CP&P), the lowest acceptable measurement for the dog, including fractions, as determined by the Measuring Official shall be recorded by the Regional Director or designee and signed by the Measuring Official. Each NAFA Jump Height Form (Form C.9) will reflect all measurements performed by an individual Measuring Official at an event. The Regional Director signs the C.9 as an acknowledgement of witnessing the measurement. A copy of the C.9 Form must be posted for view by the tournament participants.

(f)Any concerns with measuring should be discussed with the Regional Director, Executive Director, or the Chairperson of the Board. The Executive Director will respond to concerns as appropriate.

(g)The Regional Director should complete a Regional Director Measuring Worksheet (C.7 Form) for each Measuring Official at an event.

Section 4.3 –Mandatory Measuring

Mandatory Measuring Requirements

(a)All Height Dogs at least 24 months in age shall be required to obtain a NAFA Recorded Measurement at each NAFA event until they obtain their Permanent Measurement. Until they achieve their Permanent Measurement, Height Dogs will set height based on that tournament week's NAFA Recorded Measurement.

(b)All Height Dogs between 15 and 24 months in age shall be required to obtain at least one (1) NAFA Recorded Measurement as their Temporary Measurement before running as a Height Dog.

Mandatory Measuring Exceptions

(c)The following are granted exceptions to mandatory measuring requirements in paragraph 4.4 (b):

(i)Dogs ten (10) years in age or over. Dogs ten years in age or over (as of October 1, 2022) are exempt from mandatory measuring; however, failure to jump their correct jump height when used as the Height Dog is considered unsportsmanlike conduct.

(ii)For an event in the same tournament week. When there are two or more NAFA events in the same tournament week, a NAFA Recorded Measurement from that tournament week's previous event(s) may be used for the remainder of the tournament week (even if the measuring official is different for the subsequent events).

Failure to Comply with Mandatory Measuring

(d)Dogs that do not qualify for mandatory measuring exceptions (Section 4.3(c)) and do not meet the requirements in (Section 4.3(a) and (b)), shall not be considered a Height Dog and will set the jump height at the maximum height stated in 8.2(a).

Section 4.4 – Permanent Measurements

All Height Dogs are required to work towards their Permanent Measurement.

(a)**Laser Measuring Apparatus.** The laser level-measuring apparatus shall be used to obtain all Initial, Temporary, and Permanent Measurements.

(b)**Getting a Permanent Measurement.** A Permanent Measurement is obtained by receiving two NAFA Recorded Measurements that set the same jump height from two different measuring officials. (All withers' measurements below 14" are considered to be matching measurements):

(i)The actual measurements, including fractions, must be recorded on the C.9 form as per Section 4.2 – NAFA Recorded Measurements (e) (RR).

(ii)A dog may obtain multiple NAFA Recorded Measurements in the same tournament week: however, each measurement must be obtained at a separate event.

(iii)As an exception to Section 4.1 - Measuring Process (e) (CP&P), a handler may request that the Regional Director coordinate a NAFA Recorded Measurement by an

alternate measuring official (instead of the assigned measuring official for the event) if the following conditions are met:

1. The measuring official assigned to the event has previously measured the dog for an Initial Measurement.
2. The alternate measuring official agrees to perform the measurement; non-assigned measuring officials are not obligated to measure dogs at events.
3. The Regional Director and tournament director give consent.

(iv) A dog must be at least 24 months in age to obtain a measurement for a Permanent Measurement.

(c) **How to get a Temporary Measurement for a young dog.** Dogs younger than 24 months in age may obtain a Temporary Measurement by receiving one (1) NAFA Recorded Measurement:

(i) A Temporary Measurement is valid until the dog is 24 months in age.
(ii) The owner can choose to re-measure a dog under the age of 24 months for their Temporary Measurement multiple times. Any remeasure will replace the prior Temporary Measurement.

(d) **What a Permanent Measurement means.** Once a Permanent Measurement is obtained:

(i) It is good for the life of the dog.
(ii) The dog is not required to be measured again.
(iii) The owner of a dog may request a one-time only Owner-Initiated Remeasure (OIR) during the lifetime of the dog. See Section 4.6 – Owner Initiated Remeasure (OIR) Process (CP&P).
(iv) Additional measurements will not be recorded for any purpose other than judge training/certification or the OIR process.

(e) A dog's Temporary or Permanent Measurement is recorded in the NAFA database and will be available on the NAFA website.

Section 4.5 – Owner Initiated Remeasure (OIR) Process

After a Permanent Measurement is obtained, the owner of a dog may request a one-time only Owner Initiated Remeasure (OIR) Process.

(a) The owner of the dog must contact NAFA® with an OIR Process request in writing and will receive a notice of approval or denial.

(b) Until such time that the OIR Process is complete, the dog must continue to compete using its current Permanent Measurement.

(c) Any measuring officials for the OIR Process measurements are permitted to be the same used for the dog's original Permanent Measurement.

(d) Measurements for the OIR Process must be NAFA Recorded Measurements, and in compliance with Section 4.1 - Measuring Process (RR) and Section 4.2 - NAFA Recorded Measurements (RR).

(e) For comparison purposes, NAFA Recorded Measurements that set the same jump height

are considered a match (i.e., 14 ¾ and 14 ½ are considered a match). (Note that the actual measurements, including fractions, must be recorded on the C.9 form as per Section 4.2 – NAFA Recorded Measurements (e) (RR).)

(f) If any of the NAFA Recorded Measurements during the OIR process match the Permanent Measurement:

- (i) No further measurements are allowed.
- (ii) The Permanent Measurement remains unchanged.
- (iii) The OIR Process ends.

(g) If the OIR measurement differs from the Permanent Measurement, there can be a maximum of two (2) further NAFA Recorded Measurements obtained until there is a pair of matching measurements. Should the owner choose to continue with the OIR:

- (i) Subsequent OIR measurement(s) must be obtained at separate events (but may be in the same tournament week).
- (ii) Once any two OIR measurements match and if the matching measurements are done by two different measuring officials:
  1. No further measurements are allowed.
  2. The two matching OIR measurements become the dog's Permanent Measurement.
  3. NAFA updates the database accordingly.
  4. The OIR Process ends.

CHAPTER 5 - JUDGES

Types of judges

(a) A minimum of three judges, and a maximum of five judges. shall officiate when two teams are running:

- (i) **Line judges.** One judge shall be positioned at each team's starting line, facing each other;
- (ii) **Box judges**. One judge may be located at the box end in each lane, with a clear view of the flyball box and box loader, but not positioned so as to interfere with or distract the dog.
  1. Box judges are optional, and at the discretion of the tournament director.
  2. If box judges are to be used, it must be for both lanes.
  3. If box judges are to be used for only part of a tournament (for example, used for elimination races but not round robin races) notice must be given to the competitors before racing begins.
- (iii) **Head Judge.** Shall act as starter and referee.

Line judges and Box judges

(b) **Line or box judges under the age of 18** must have prior approval from the Regional

Director. (Head judges should also be notified.)

(c)**Responsibilities.** The box judges and line judges shall remain stationary during each heat; dogs may go around judges and balls bouncing off of a judge shall be deemed in play. The principal responsibility of each box judge and each line judge is to watch for violations in the racing lane that they are assigned.

(d)Line judges shall:

(i)record which dogs participate in every heat and record win/loss using the NAFA Time Sheet (Form C.2);
(ii)verify the jump heights are set correctly for each heat based on the Height Dog and class of racing (e.g., Regular and Multibreed classes).
(iii)indicate with a signal when an infraction has occurred.

Head judges

(e)**Arrive early.** Upon arriving at the site, the head judge shall immediately report to the tournament director. Judges should be at their ring at least one half hour before the competition to check the ring, jumps, matting, and backstops. If dogs are to be measured and boxes are to be inspected before the competition, the judge should allow additional time as directed by the tournament director.

(f)**Position in ring.** The head judge (starter and referee) shall be positioned between the racing lanes in the area between the start/finish line and the lead dogs to start the heat. If necessary, a head judge shall reposition themself so as not to interfere with competing teams. The head judge may confer with the line judges and the box judges before determining a winner.

(g)**Reruns.** The head judge shall indicate with a signal, which dogs must rerun. It is the handler's responsibility to note the signal and rerun their dog.

(h)**Stopping Heat.** The head judge shall stop the heat for interference, fouling in the racing ring, or undue aggression by dog or competitor and award that heat to the competing team. If it is necessary to stop a heat, the judge shall use a whistle.

(i)Judges are not to:

(i)engage in conversation with a disgruntled exhibitor. The head judge may excuse any person for breach of the Code of Ethics;
(ii)assist teams during warm-up;
(iii)consume alcohol during their judging assignment.

CHAPTER 6 - REPORTING FOR RACES

(a)**Late for racing.** If a team is more than three minutes late from the conclusion of the designated warm-up period, the head judge will declare a forfeit of that race by that team unless an excused ring conflict exists. Any ring conflicts must be reported to the head judge

or the Head Table prior to the race in question.

(b)**Winning by forfeit.** When a team forfeits, the opposing team must still complete the minimum required heats to win the race.

(c)**Just cause for forfeit.** Forfeiting teams that do not show just cause may be excused from the tournament by the tournament director and may be subject to further discipline. Forfeiting teams may not run any dogs in the heats that are forfeited. If a team forfeits a heat and then subsequently runs a dog(s) in violation of this rule, they will automatically be considered as For Exhibition Only (FEO).

(d)**Teams** from same club racing each other. If a team has to forfeit when its "A" and "B" teams are in the same race, the faster seeded team must run and the slower seeded team must forfeit.

(e)**For Exhibition Only (FEO).** Once a team declares itself For Exhibition Only, the team cannot return to regular competition. From that point on, the team can no longer obtain NAFA points or tournament points. FEO teams may not run if the opposing team raises an objection with the judge. Once teams declare themselves For Exhibition Only, they are ineligible for placement and shall be placed in the lowest seed of any eliminations. A club cannot enter a team into a NAFA sanctioned event For Exhibition Only. A team running For Exhibition Only is subject to all the rules of competition with the exception of the following:

(i)3 or 4 dogs may be run in a heat;
(ii)(any jump height from 7" to 14" is allowed at the discretion of the team;
(iii)less than four breeds may be run in multibreed classes;
(iv)in the event a dog commits an infraction, it may complete its run but not rerun; and
(v)the judge may excuse the team from the race for failure to comply with these conditions or other NAFA rules.

(f)**Performance Teams.** Performance teams may include dogs that otherwise would be ineligible to compete because the dog earned points on another club's team within the preceding 87 days, as prohibited in subsection (a) above. This exception is subject to the following terms, conditions and requirements:

(i)**NAFA® Rules and Policies Apply.** Clubs, teams, dogs and participants on performance teams remain subject to and governed by all of the provisions of the NAFA® Rules of Racing and Corporate Policies and Procedures, except as specifically set forth below.
(ii)When a team in the Multibreed Class declares performance, the requirement of four different breeds set forth in Section 6.2 – Classes of Competition (d) (CP&P) does not apply. When a team in the Regular Class or Multibreed Class declares performance, jump heights shall be set at any height not below the minimum and not exceeding the maximum height stated in Section 8.2 – Jump Heights (RR).
(iii)**Conversion to Performance Team Entry.** With the permission of the tournament director and Regional Director for cause shown, a team entered in a regular or non-

regular class may be converted from its original status to a performance team entry prior to the start of the tournament. The intent of this conversion privilege is to allow teams that have already entered a tournament but who, for unforeseen reasons, find themselves unable to field a complete team, to run for points with a dog or dogs from another club. “Cause” shall include, but not be limited to, circumstances such as dog injury, illness, or other unforeseen situation. A team may not enter a tournament as a performance team. Abuses to the Performance rules will be subject to disciplinary action.

(iv)**Performance Team Status Declared**. A team’s status as a performance team entry shall be clearly shown on the team’s time sheet and declared prior to the start of racing. The team’s status as a performance team shall be disclosed on the seeding list prepared and circulated by the host club prior to the tournament and/or at the captain’s meeting before the racing starts. Once a team is declared to be a performance team, its status does not change, even if the non-club dog(s) listed on the time sheet do not earn any points.

(v)**Club Affiliation.** A dog’s club affiliation is not affected by reason of running on a performance team.

(vi)**Other Classes or Time Sheets.** A dog that is listed on a time sheet for a performance team may be listed on the time sheet for one additional team provided the entry is on a team in another class, except in circumstances where a second entry would be prohibited by Sections 6.2 – Classes of Competition (CP&P).

(vii)**Placements and Awards.** A performance team is not eligible for tournament awards or placements. A performance team will not be awarded any wins in any races or heats. A team racing against a performance team must complete the minimum number of heats in order to record a win. In an elimination event, performance teams shall be placed at the bottom of the elimination brackets, with the performance teams being ranked by time among themselves by seed time in the event more than one performance team is in the elimination schedule.

(viii)**Record Times, NAFA® Seed Times, and Championships.** A performance team is not eligible to set a NAFA® world record. The rules governing world records stated in Section 7.1 – World Record Times (CP&P) do not apply to performance teams. Times set by a performance team shall be recorded on the time sheet for purposes of calculating points earned by the dogs on the time sheet entered into the NAFA® Database but for no other purpose. Regardless of the regional affiliation of the club fielding the performance team, such teams shall be treated as out of region teams for purposes of the rules governing regional championships.

CHAPTER 7 - WARM-UPS

(a)There shall be a designated time period for warm-ups prior to each race. There shall be no other practicing in the ring for the duration of the racing day

(b)Practice Start:

(i)One or both teams in the ring may make a request to the judge for one practice start before the warm-up is over;
(ii)No team is required to utilize the practice start;
(iii)The practice start will take place immediately after the warm-up and prior to the first heat of the race;
(iv)Only one practice start is permitted per race. If one or both of the practicing dogs is interfered with before crossing the start line, an additional practice start may be offered at the discretion of the judge;
(v)As soon as one or both dogs cross the start line during the practice start, the judge will blow the whistle and stop the EJS;
(vi)No more than one dog from each team in the ring may participate in the practice start;
(vii)Props are permitted during practice start.

(c)When a team is delayed by an excused ring conflict, warm-ups shall not begin until both teams are present in the ring unless warm-ups have been waived. Teams already present and waiting may set their jumps and place their box.

(d)Only the six dogs listed on the team's time sheet are allowed to warm-up (and a seventh dog listed as warm-up only). For rules specific to the warm-up only dog, please see Section 3.2 – Clubs, Teams, Time Sheets, and Warm-up Only (j) (RR). Each of the six listed dogs must have a valid CRN and be eligible to compete. Any dog(s) that warm-up in violation of this rule (other than the dog listed as warm-up only) will cause:

(i)Forfeiture of the race;
(ii)Forfeiture of the next race for any team(s) on which the dog is listed.

CHAPTER 8 - RULES OF RACING

Section 8.1 - Tournament Seeding/Breakout Rule

Tournaments will be seeded by the times submitted with the team's entry. After the closing date, the tournament director will divide the entered teams into divisions. Each division's breakout time will be one (1) second faster than the top team's seed time. Except in Division 1, a team running more than one (1) second faster than the top team's seed time will "break out" of the division and will be declared the loser of the heat. NOTE: Tournament time sheets should be marked BO and show a loss, however the actual time run should still be recorded for NAFA® dog points.

(i)A team that breaks out two (2) times in a tournament class spanning one (1) day is ineligible for any tournament placement; NAFA points are still awarded for completed

heats;

(ii)A team that breaks out three (3) times in a tournament class spanning two (2) days is ineligible for any tournament placement; NAFA points are still awarded for completed heats;

(iii)In the event both teams in a heat break out, both teams will be awarded a loss;

(iv)When one team breaks out and the other team does not finish its heat, both teams will be awarded a loss;

(v)When the timing table misses calling breakouts and the race has ended, the breakout wins are to be converted to losses. If the converted losses leave the race undecided, additional heats will be run to complete the race;

(vi)In elimination rounds, where seeding is determined by Round Robin, a team ineligible for placement shall be seeded last;

(vii)In elimination round heats, where a team ineligible for placement competes against a team eligible for placement, the ineligible team shall be awarded a loss.

Section 8.2 - Jump Heights

(a)Except as provided in paragraphs 8.2 (c) and (d) below, jump heights shall be set no lower than six inches below the height at the withers of the Height Dog, to a minimum jump height of 7 inches. Maximum jump height shall be 14 inches. All 4 jumps should be set at the same height.

(b)Jump heights shall be adjusted in one inch increments, to the lowest whole number (13 and 3/4 inches becomes 13 inches).

(c)In the Veterans class, jump heights shall be set at any height not below the minimum and not exceeding the maximum height stated in paragraph 8.2(a).

(d)In the Open class, jump heights shall be set at any height not below the minimum and not exceeding the maximum height stated in paragraph 8.2(a).

(e)If the head judge determines a team is not jumping at least the minimum required height in a round robin format, the team shall forfeit any heats run at the improper jump height; in the case of an elimination format, the team shall be excused.

Section 8.3 - The Heat

(a)**The Run.** Dogs may start from a stationary or running start. Each dog is to hurdle the four jumps in succession, trigger the box, releasing the ball, retrieve the ball and return over all four jumps and the start/finish line with the ball in its mouth. Only when the first dog has reached the start/finish line with any part of its body (on the ground or in the air) may the second dog reach the start/finish line with any part of its body (generally this is a nose-to-nose pass at the start/finish line), and so on for all four dogs as well as dogs that must run again. Using food in the ring is permitted, as are tugs and other motivators.

(b)**Ready to Race.** Teams must be ready to start each heat in a reasonable amount of time.

The first unreasonable delay by a team will result in a warning by the head judge. Subsequent offenses will result in a forfeit of the heat.

(c)**Box Malfunction.** The box loader shall indicate to the head judge when there is a box malfunction. The heat shall be stopped. The head judge is to examine the box. If, in the opinion of the head judge, the box has malfunctioned the heat shall be run again. If the box is found to be working, then the heat shall be forfeited. If another box is not available and the box cannot be repaired in a reasonable time, the heat and any remaining heats are to be forfeited. If the box malfunctions a second time (or the spare box malfunctions) in the same race, the heat shall be forfeited and all remaining heats in that race shall be forfeited.

(d)**Fouling.** If a dog urinates or defecates in the racing ring during a heat, the judge will stop that heat and award that heat to the opposing team assigning them an estimated time. If a dog urinates or defecates in the racing ring at any time prior to the first heat, causing a delay, or between heats, the judge will award the next heat to the opposing team, assigning an estimated time to that team. The time will be marked as estimated and will not be used to determine placement.

(e)**Conduct of the box loader.** Should the ball bounce back in the cup as the dog tries to catch it, the box loader may re-set the box for the dog to trigger it (without penalty). Except during the warm-up, to retrieve a loose ball, reset a jump, or to get a fresh supply of balls to load for the current heat, the box loader must remain in the upright position behind the box, and may offer verbal encouragement only, as long as such encouragement does not distract the opposing team. For deaf dogs, box loaders should be permitted to use a subtle hand signal as long as it does not interfere with other competitors. As a courtesy to opposing teams, the box loader is to remain in position until the outcome of the heat is determined by the head judge. If, in the judge's opinion, a box loader has violated any of these rules, their team may forfeit the heat.

(f)**Inside Interference.** If a dog or any team member interferes with the opposing team during a heat, the team causing the interference will forfeit the heat. This includes interference in the racing lane, in all in bound areas, and in the area where dogs are waiting to run. Interference is defined as impeding the other team's dog from running its race. A dog chasing a loose ball into the other team's area is not necessarily interference. In the event of interference, the judge will assign an estimated time to the team that was interfered with. The time will be marked as estimated and will not be used to determine placement. If a dog crosses the start/finish line after it has already successfully completed the course, it is not an infraction.

(g)**Safety Hazards/Outside Interference.** If, in the opinion of the head judge, a safety hazard exists during the running of the heat, the heat shall be stopped and restarted. Lineups may be changed without penalty.

(h)Infractions.

(i)Infractions that require the rerunning of the dog to be rerun after the initial four dogs in

the order they initially ran:

1. Early passes will be indicated by the EJS and the line judge and/or the head judge. When running without an EJS system, the line judge will indicate an infraction;
2. Missed jumps;
3. Not carrying the ball over each jump in succession;
4. Does not trigger the box;
5. Dog takes the ball from the cup without first triggering the box;
6. The dog retrieves a ball which has rolled out of the box before being triggered;
7. Does not carry the ball over the start/finish line;
8. Inappropriately assisted by the box loader, spectator, or handler:

Other people may assist the dogs and handlers but may not assist the dog in actually navigating the course. A person helping catch the dog in the back area, or revving the dog up before they run would not violate the rules. A person running alongside the dog as they run over the jumps (even outside the ring) is not permitted.

9. A handler or their object crosses the start/finish line during the dog's run (with the exception of resetting knocked down jump(s) or retrieving loose ball(s)).
10. Any part of the dog's body, whether in the air or on the ground, or any part of the handler's body or their objects passing the start/finish line before the timing of the heat begins.

(ii)**Infractions for which first offense shall receive warning;** a second offense and any offense thereafter during racing will result in the loss of the heat:

1. Distractions. Team members shall not distract the opposing team by any means, nor throw any object for their dogs (i.e., balls, toys, Frisbees, dummies, gloves, or treats). Team members are required to pick up any loose balls.
2. More than one handler is present in the Initial Runback Zone and is seen to be guiding the dog or aiding as a marker for the dog.

(iii)**Infractions resulting in forfeiture of the race**:

1. Children who are too young to be able to participate safely (e.g., children in strollers, car seats, baby carriers, or being held in a person's arms) are not permitted in the ring during racing or warm-up periods. If a judge excuses a child and the club either refuses to have the child leave, or the club re-enters the ring with that child at that tournament during warm-up or racing, the team will forfeit the race (retroactively if the child enters the ring after the race has begun).

(i)**Knocked down jumps.** A team whose dog(s) knocks down a jump(s) during its run shall not be penalized, provided all dog(s) clear the jump(s) as if it were standing. A "runner" or handler may set up knocked down jump(s) if so doing does not interfere with either team or guide the dog in any way. Even if the judge does not stop the heat for a knocked down jump(s), it is up to the individual competitor to decide whether it is appropriate to run his or her dog, or to accept a no finish.

(j)**The finish.** The first team to have all four dogs successfully complete a run wins the heat. The finish shall be when the last of the four dogs reaches the finish line with any part of its body.

(k)**Winner.** Determining the winner of a heat:

(i)When a heat is judged using the Electronic Judging System, the winner of close heats shall be determined based on the Electronic Judging System times.

(ii)Video shall not be used to override or help determine the winner of a heat. Video can be used to remove a malfunctioning EJS from the ring, but it may not be used by a judge as the basis to rerun a heat.

Section 8.4 - Aggressive Dogs

If a dog shows undue aggression at any time during the competition, the head judge may excuse the dog from competing. It is the judge's discretion to evaluate the context of the situation and make an appropriate determination. The head judge must report any dog excused from competition on NAFA® Form C.12. The head judge is responsible for sending the completed form to the NAFA corporate address within ten days of the incident. Ordinarily, the Regional Director and dog owner/handler (and/or club owner) should receive a copy of the incident report at the tournament. In the event that this becomes impracticable, copies shall be distributed to those individuals within ten days of the incident.

Section 8.5 - Dogs and Handlers with Disabilities, Condition of Dog

(a)To compete, a dog must be safely able to complete the course.

(b)A dog with a disability may compete if the head judge determines that the dog meets the criteria in paragraph 8.5(a).

(c)A judge is allowed to make a reasonable accommodation and/or exceptions to the Rules of Racing for the needs of a handler with a disability, so long as these accommodations do not interfere with other competitors.

(d)A judge is allowed to make a reasonable accommodation and/or exceptions to the Rules of Racing for the needs of a dog with a disability, so long as these accommodations do not interfere with other competitors. For deaf dogs, box loaders are permitted to use a subtle hand signal as long as it does not interfere with other competitors.

(e)The head judge has the right to inspect any dog at any time during the tournament. If in the opinion of the head judge a dog is lame, in season, recovering from surgery, or cannot safely compete, the dog shall be excused from competition. The head judge must report any dog excused from competition to the Executive Director on NAFA® Form C.12.

(f)Protective wrap on a dog's legs may be used.

Section 8.6 - Race Results

(a)The winner of a race is determined solely by the win/loss record of heats that compose a race. In elimination racing when the win/loss record of heats is equal, best time in the race may be used to resolve the tie.

(b)Host clubs must post race results (heat times and wins/losses) for competitors, as soon as possible, following the running of each race.

Section 8.7 - Racing without the Electronic Judging System (EJS)

The following rules apply when racing any heat without an EJS for any reason:

(a)The breakout rule in Section 8.1 -Tournament Seeding/Breakout Rule (RR) does not apply;

(b)Racing procedures:

(i)The head judge (starter and referee) shall be positioned between the racing lanes in the area between the start/finish line and the lead dogs to start the heat. If necessary, a head judge shall reposition himself/herself so as not to interfere with competing teams.

(ii)The head judge shall maintain a consistent starting cadence of approximately one (1) second intervals throughout the tournament and shall indicate the start with a whistle. Timing of the heat begins with the whistle. For example, please see Illustration 5.1. In tournaments with multiple judges, uniform visual start signals should be used.

Illustration 5.1 – Starting positions without Electronic Judging System

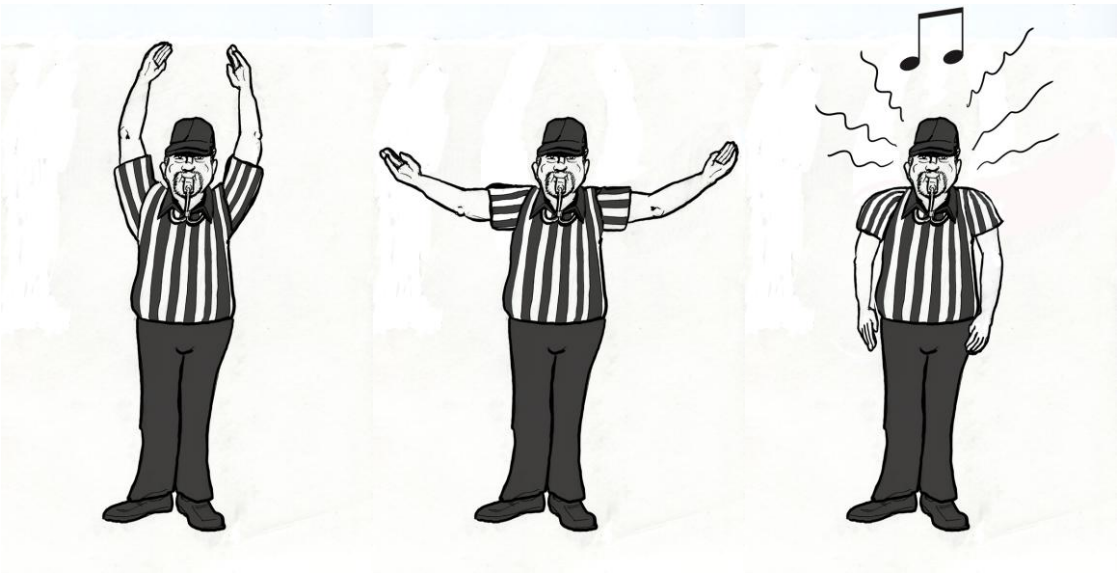

"Ready" "Set" "Tweeet"

(c)Early passes and other infractions will be indicated by the line judge and/or head judge;

(d)If necessary, the head judge (starter and referee) should be in position to assist the line

judges in determining winners of close heats.

(e)In determining the winner of the heat, the line judges' decision must be unanimous and shall be based on their visual view of the finish line, not on the clocks. If the line judges are not in agreement, the head judge shall consult with the line judges and either declare a winner or declare the heat to be a tie.

GLOSSARY

Breakout - when a team, during competition, runs faster than the designated time for the division in which it is competing. See Section 8.1 – Tournament Seeding/Breakout Rule (RR).

Class - An established category of racing. See Section 6.2 – Classes of Competition (CP&P)

Club - an organization that is registered with NAFA® and is represented solely by one owner.
Excused Ring Conflict - A ring conflict that is reported to and accepted by the head judge or Head Table prior to the start of the race.

For Exhibition Only (FEO) - where a team chooses not to compete in a tournament. See Chapter 6 – Reporting for Races (e) (RR).

Forfeit - Where a team cannot, or chooses not to compete, and thus loses the race. See Chapter 6 – Reporting for Races (b) & (c) (RR).

Good Standing - A club is in good standing with NAFA® when all of the following are true:
(i) the club itself is not on probation or suspension;
(ii) the owner of the club is not on probation or suspension.

A person is in good standing with NAFA when the person is not on probation or suspension.

Handler - The person holding, releasing and/or catching the dog.
Heat - a single competition in which a winner or tie is determined, several of which will determine the winner of the race.

Height Dog - The dog(s) responsible for determining the jump height in a given heat.

Initial Measurement – The first in a series of NAFA® Recorded Measurements used to establish a Permanent Measurement.

Initial Runback Zone – That area of the runback which begins at the start/finish line, spans across the width of the ring and extends to the first 20 feet of the length of the runback.
Inside Interference - Where a factor inside the racing lane interferes with a team during a heat.

Measuring Official – a NAFA® approved or supervising judge who has been trained and certified to use the NAFA Measuring Apparatus.

Measuring Surface – A stable and level surface with adequate traction on which the dog stands. This surface may be raised (a table) or not raised (ground).

NAFA® Measuring Apparatus – NAFA approved leveling laser, tripod, and NAFA supplied ruler.

NAFA® Recorded Measurement – A measurement that is witnessed by the Regional Director at a NAFA sanctioned event and recorded on a NAFA C.9 Form.

A NAFA Recorded Measurement designated as 'For M/O Training/Certification' or 'For Event Only' on the NAFA C.9 Form, cannot be used as an Initial, Temporary, or Permanent Measurement; OIR Measurement; or measurement for a NAFA World Record.

Not Measurable - Refuses to stand; refuses to stand still; refuses to stand in an acceptable measuring stance as set forth in Chapter 4 – Measuring (RR), which results in the judge being unable to take an acceptable measurement within the allotted number of measuring attempts.

Outside Interference – Where a factor from outside the racing lane, not involved in the current heat, interferes with a team during a heat.

Permanent Measurement – The official height of a dog as a whole number, obtained by receiving a pair of NAFA® Recorded Measurements for the same jump height from two different measuring officials, at two separate events. A dog must be at least 24 months in age to obtain its final measurement for a Permanent Measurement. A dog having a Permanent Measurement has met the requirements of mandatory measuring.

Racing year - The NAFA® Racing year runs from October 1 through September 30 of the following year and is the NAFA fiscal year. See NAFA Bylaws Article VIII Section 2.

Race - a group of heats.

Racing day – the racing day begins thirty minutes before the first scheduled race and ends after the conclusion of the last race of the day.

Racing lane – The racing lane extends from the backstop behind the box, through the course, through the start finish line, to the point where the racing surface (grass, matting, etc.) no longer extends at least 4.5 feet on either side of the racing lane center line. See also the diagram in Section 2.4 – Ring Layout (RR).

Ring - the area in which flyball racing occurs. This area includes the racing lanes, from the backstops to the start/finish lines, the runback area and the required clearances beside the racing lanes/runback area. See Chapter 2 – Ring Set-up (RR).

Runback – That area of the racing lane leading up to the start finish line, before the course, which consists of the racing surface (grass, matting, etc.) a minimum of 4.5 feet on either side of the racing lane center line. This distance is required on the sanctioning form to sanction an event.

Start/finish line - a line on the floor which determines the plane which the dog crosses to start and end his run. See Chapter 2 - Ring Setup (RR) and Section 8.3 -The Heat (RR). Team - a subpart of a club. Teams are created by the club to compete at NAFA® Sanctioned Events.

Temporary Measurement – NAFA Recorded Measurement for a height dog that is between 15 and 24 months in age. A dog having a Temporary Measurement has met the requirements of mandatory measuring and is not required to measure again until the dog is at least 24 months of age.

Tournament - an event where clubs and teams compete, using agreed upon rules, format,

and regulations.

Tournament week - A tournament week runs from Wednesday through Tuesday of the following week.

NORTH AMERICAN FLYBALL ASSOCIATION, INC. ®

CORPORATE POLICIES & PROCEDURES (CP&P)

CHAPTER 1 – EXECUTIVE DIRECTOR STAFF

Section 1.1 – Statistician

The Executive Director will appoint one or more statisticians to manage the following:

(i)Maintain records and manage changes and additions.
(ii)Process applications for new clubs and assign club numbers.
(iii)Issue Competition Racing Numbers (CRNs).
(iv)Mail certificates and point summaries to clubs on a quarterly basis.
(v)Score tournament time sheets and submit results to the NAFA® database.
(vi)Distribute pins for awards earned.
(vii)Distribute plaques for awards earned.

Section 1.2 – Tournament Sanctioning Secretary

The Tournament Sanctioning Secretary is appointed by the Executive Director and is responsible for:

(i)The sanctioning of NAFA® tournaments.
(ii)Confirmation of sanctioning,
(iii)Confirmation of receipt of certificate of additional insured.

Section 1.3 – Webpage

The NAFA® webpage (www.flyball.org) is the primary means of disseminating the latest information to the NAFA® flyball community.

Section 1.4 – EJS Coordinator

The Executive Director shall appoint one or more EJS coordinators to be responsible for:

(i)The coordination and shipping of NAFA® owned EJS to tournaments in their specified geography.
(ii)The collection of requirements for future EJS or changes to current EJS.
(iii)The maintenance of EJS to assure continued, reliable operation.

Section 1.5 – Webmaster

The Executive Director shall appoint one or more webmasters, responsible for the following:

(i)Procurement of webservers to host NAFA® content on the World-wide web.
(ii)Maintenance of content to be presented on the web, including the assurance of its currency.
(iii)Recommending new and innovative ways NAFA® might exploit emerging web technology to further its stated purposes.

Section 1.6 – Regional Directors

Regions and Appointment of Regional Directors

(a)NAFA®'s geography shall be divided into regions by the Executive Director and approved by the Board of Directors.

(b)Regional Directors shall be appointed by the Executive Director and approved by the Board of Directors. Upon a change of Executive Director, the slate of Regional Directors shall be tendered for approval at the next in-person meeting of the Board of Directors.

(c)The Regional Director will be responsible for a geographical region based on the number of clubs and tournaments.

(d)The Regional Director shall comply with the NAFA Conflict of Interest Policy stated in Chapter 9 – Conflict of Interest Policy (CP&P).

Responsibilities Outside of Events

(e)The Regional Director shall:

(i)be willing and capable of advising and assisting new clubs;
(ii)work with the tournament directors and be responsible for the final approval of the tournament schedule, format, and the seeding of teams at NAFA sanctioned tournaments;
(iii)communicate regional business with the Executive Director.

Responsibilities and Authorities at Events

(f)The Regional Director's responsibilities at events are the following:

(i)attend or be represented at NAFA sanctioned tournaments in their region;
(ii)demonstrate a knowledge of the NAFA Rules of Racing and Corporate Policies & Procedures;
(iii)observe the measuring of dogs by the Measuring Official using the NAFA Measuring Apparatus and provide verbal feedback to the Measuring Official during the measuring process.

(g)For measuring of Height Dogs, Regional Directors shall:

(i)be certified to act as a witness to NAFA Recorded Measurements. A Regional Director is certified when they have watched the required NAFA Measuring training videos.
(ii)work together with measuring officials to ensure there is no conflict of interest, or appearance of conflict of interest for NAFA Recorded Measurements (see also paragraph (i) (Designation of an Acting Regional Director)). For example, if the Measuring Official and handler are members of the same club, it is recommended a video recording of the measurement be submitted to the Judges Committee for review.
(iii)work together with measuring officials to ensure the stance is an accordance with Section 4.1 – Measuring Process, and the measurement is accurate

(iv)Complete a C.7 form for each measuring official at the event.

(h)Regional Directors have the following authorities:

(i)to put on notice the tournament director, host club, competing club, individuals, or judge for violating NAFA Rules or Policies or for engaging in conduct prejudicial to the sport;
(ii)to excuse an individual from a tournament for breach of Code of Ethics;
(iii)to excuse a dog showing undue aggression at any time outside of the ring in conjunction with a NAFA event. The regional director may excuse the dog from the event regardless of entry in the competition.

Designation of an Acting Regional Director

(i)The Regional Director shall designate an acting Regional Director when duties for the following roles are being fulfilled:

(i)If the Regional Director is also the tournament director;
(ii)If the Regional Director is actively measuring or judging during the tournament;
(iii)If the Regional Director is acting as a witness to NAFA Recorded Measurement and there is conflict of interest, or appearance of conflict of interest. For example, if a dog on their club is being measured.

(j)The designation of the acting Regional Director shall be approved by the Executive Director. Wherever possible, the acting Regional Director should be certified to act as a witness to NAFA Recorded Measurements.

CHAPTER 2 – JUDGES

Section 2.1 – Head Judges

Responsibilities of Judges

(a) Judges must be in good standing with NAFA®. Judges should be friendly and courteous, even sympathetic, but above all impartial and firm. Judges must have a thorough understanding of the rules and policies gained through personal experience.

(b) The judge's responsibility also extends to the exhibitors, to the host club or organization, and the spectators and sponsors. A judge must be an arbiter and diplomat. A judge must leave exhibitors and spectators with the feeling that each team was given an equal opportunity and that no team was given an unfair advantage.

(c) The Rules of Racing and Corporate Policies & Procedures are a basic guide. They should not be considered a manual containing explicit direction for every possible situation. Judgement calls should be based on the experience, good character, and fairness of the judge. The intelligent application of discretionary authority demands that a judge exercise common sense, fairness, and initiative. **Above all else, the safety and well-being of the dog and exhibitors shall be foremost**.

(d) The Board of Directors reserves the right to revoke a judge’s status at any time for just

cause.

(e) Judges shall comply with the NAFA conflict of Interest Policy stated in Section 9.3 – Representing NAFA (CP&P).

Judging Attire

(f) When selecting judging attire, it is to be understood that the judge is in the ring to evaluate the team performance and not to be the center of attention. Judges are expected to uphold an image of integrity and professionalism at all times and an integral part of this image is appropriate attire. A judge shall not wear any apparel bearing prominent business, sponsor or other organization's insignia without the permission of NAFA®. Judge's jerseys shall be black, white or combinations of those colors. Head judges shall not wear the uniforms or hats of any racing clubs. It is highly encouraged, but not required, that relief judges comply with this standard while judging.

Judge's Home Region

(g) A judge's home region, absent a written request for a change, is the place of residence of the judge recorded in the NAFA database.

(h) A judge may change their home region to their preferred region by submitting a written request to NAFA before the start of the racing year.

Section 2.2 – NAFA® Approved Judges

Achieving Approved Status

(a)Persons interested in becoming an approved NAFA judge must follow the procedure outlined in Appendix D – Judges Training Program and the procedure for obtaining measuring official status in Section 2.3 - Measuring Official Status (CP&P).

Maintaining Approved Status

(b)**Requirements for racing year**. In each racing year, an approved judge must meet the following requirements:

(i)**Judging assignments.** Judge at least one (1) division in three (3) tournaments on three (3) different tournament weeks.

(ii)**Maintain their measuring official certification**.

(iii)If the judge transitioned from provisional to approved status during the racing year:

1. Provisional and approved assignments will be combined to meet the minimum number of required assignments;
2. dogs measured for provisional requirements will count towards the racing year's requirement for maintaining measuring official status.

Requirements for Reinstatement of Approved Status

(c)**Loss of status due to lack of judging assignments.** Judges who do not meet the judging assignment requirements of paragraph 2.2(b)(i) to maintain their approved status in any one racing year, revert to provisional judge status and must do the following, within one (1) NAFA racing year:

(i)judge at least two (2) divisions of a tournament on two (2) different tournament weeks under the supervision of a NAFA supervising judge, and then judge at least one (1) division at two additional tournaments.

(ii)obtain a completed C.18 form for each of the four assignments and submit them to the Judges Committee for reinstatement as an approved judge.

(d) **Loss of status due to losing measuring official status. Judges** who do not meet the requirement to maintain their measuring official certification in paragraph 2.2(b)(ii) to maintain their approved status in any one racing year, revert to provisional judge status and must follow the requirements of Section 2.3 - Measuring Official Status (g) (CP&P).

Section 2.3 – Measuring Official Status

(a)All NAFA® judges are required to be trained and certified as measuring officials.

Responsibilities of Measuring Officials

(b)Certified measuring officials shall make it a top priority to foster trust in NAFA's measuring process. In pursuit of this goal, they must:

(i)work with the Regional Director to ensure compliance with NAFA's conflict of interest policy.

(ii)use their judgement to determine if extra steps are required to maintain transparency, such as submitting a video recording of a measurement for review by the Judges Committee.

Training of Measuring Officials

(c)**Watch NAFA Measuring videos.** The candidate is responsible for watching all required NAFA measuring training videos.

(d)**Complete measuring assignments.** The candidate must complete the following, as part of their judging training:

Novice Judge

(i)Observe a measuring official measure dogs at three (3) different tournaments, over three (3) different tournament weeks. For one (1) of the three measuring observations, the measuring official must also be a supervising judge.

(ii)At each of these tournaments, the candidate shall demonstrate to a measuring official their ability to set up the Measuring Apparatus and practice measuring a minimum of five (5) dogs (these are not NAFA Recorded Measurements).

Apprentice Judge

(iii)Measure a minimum of eight (8) dogs, at three (3) different tournaments, on three (3) different tournament weeks under the supervision of two (2) different measuring officials, who are also NAFA supervising judges. The supervising judges must be from different regions; one (1) may be from the same region as the apprentice judge.

(iv)At a minimum, all measurements for the last assignment must be NAFA Recorded Measurements (designated as 'For M/O Training/Certification Only').

(v)Any NAFA Recorded Measurements by an apprentice judge must be designated as 'For M/O Training/Certification Only'

Provisional Judge

(vi)Measure a minimum of eight (8) dogs, at three (3) different tournaments, on three (3) different tournament weeks for NAFA Recorded Measurements (designated as 'For M/O Training/Certification Only' or 'For Event Only').

(vii)Obtain a completed C.18 form for each of the three assignments and submit them to the Judges Committee.

(viii)Any NAFA Recorded Measurement by a provisional judge must be designated as 'For M/O Training/Certification Only' or 'For Event Only'.

(e)Once the candidate has completed the training requirements in paragraphs 2.3(c) & (d), and all other requirements for becoming an approved judge, they are eligible to be considered for approved judge status with measuring official status.

Maintaining Measuring Official Certification

(f)**Requirements for racing year.** In each racing year, to maintain their measuring official status, a judge must measure at least five (5) different dogs for NAFA Recorded Measurements (any of these may be designated as 'For M/O Training/Certification Only' or 'For Event Only').

Requirements for Reinstatement of Measuring Official Status

(g)If the requirement paragraph 2.3(f) has not been met at the end of the racing year:

(i)The judge will have a grace period of three (3) months to meet the requirement; dogs measured during the grace period will not count toward the minimum for the current racing year.

(ii)A judge who fails to meet the requirement within the grace period will revert to provisional judge status. They must complete the measuring requirements in paragraph 2.3(d) for provisional judges before being considered for approved status.

(h)NAFA reserves the right to revoke a measuring official's certification for cause.

Section 2.4 – NAFA® Supervising Judges

Criteria for Qualifying to be a NAFA Supervising Judge

(a)Judges applying for NAFA supervising judge status must meet the following criteria:

(i)**Be in good standing.** They must be in good standing with NAFA, with no letters of discipline, probation, or suspension records, dating back at least 5 years.

(ii)**Have at least 5 years of experience.** They must have been involved in the sport of flyball for a minimum of 5 years, with at least 3 continuous years as a NAFA Approved judge.

(iii)**Meet minimum judging assignments**. In the time the candidate has been judging, they must have judged a minimum of one division in 25 tournaments on separate tournament weeks, in order to gain the kind of experience required to supervise new judges.

(iv)**Have supervising judge qualities.** Possess all the best qualities one could want in a supervising judge including:

- being fair and firm;
- always prioritizing safety;
- having a good attitude towards the sport, participants, and the spectators;
- having a sense of responsibility to the sport and as a representative of NAFA;
- a desire to mentor others and promote NAFA flyball in a positive manner.

(v)**Have mentoring capabilities.** Be willing and able to mentor new and apprentice judges: answering questions, challenging apprentices, and generally overseeing the education of the new judge. The sharing of experiences and the ability to explain rulings and other nuances of the sport are an absolute must.

(vi)**Have excellent measuring skills**.

Achieving NAFA Supervising judge Status

(b)**Written proposal**. Prospective judges for supervising status may be proposed to the Board of Directors in writing by any Board member, judge, or participant in official NAFA events.

(c)**Recommendation letters**. The proposal must be accompanied by the following recommendation letters, which should contain personal observations of any of the qualities referred to in paragraph 2.4(a)(iv):

(i)At least five (5) letters of recommendation from different tournament directors for whom the applicant has judged.

(ii)Two (2) letters of recommendation from fellow NAFA approved judges.

(iii)A letter from the Regional Director for the applicant's home region.

(d)**Comment period**. The name of the judge applying for supervising status will be published on the NAFA webpage for a period of at least seven (7) days, to allow for comment to the Board.

(e)**Meeting with Judges Committee**. Prior to the application being presented to the Board, the applicant will be required to meet with the Judges Committee (this may be done remotely) to discuss their application.

(f)**Board approval needed**. Meeting of all the necessary criteria for supervising status does not mean an automatic approval by the Board of Directors. It is not the intention of the Board to appoint great numbers of supervising judges in any area.

Maintaining NAFA Supervising judge Status

(g)**Requirements for racing year.** In each racing year, a supervising judge must meet the requirements of maintaining approved judge status (see Section 2.2 NAFA Approved Judges (b) (CP&P)).

(h)The Board of Directors reserves the right to revoke supervising status at any time for just cause.

Requirements for Reinstatement of NAFA Supervising Judge Status

(i)Supervising judges who do not meet the requirements to maintain their approved status in any one racing year must do the following:

To be reinstated as an approved judge –

(i)judge at least one (1) division at two (2) tournaments on different tournament weeks;

(ii)obtain a completed C.18 Form for each of the two assignments and submit them to the Judges Committee for reinstatement to approved status.

To be reinstated as a supervising judge (once an Approved judge) –

(iii)Complete paragraph 2.4(b) and (c) and submit the documents to the Judges Committee.

(iv)The Judges Committee will review the documents and provide a recommendation to the board regarding reinstatement of supervising status.

CHAPTER 3 – ANNUAL GENERAL MEETING

(a)An annual meeting will be held each year to discuss old and new business and tabulate votes for Board members and the Executive Director as required.

(b)The actual number of votes for each candidate will be made public at the annual meeting and published.

CHAPTER 4 – DELEGATE VOTES

(a)When the Board of Directors calls for a delegate vote on a topic, the proposed issue will be published on the NAFA® web page for comment. Following a three (3) month comment period a vote will be called. For the motion to pass, the motion must be supported by 2/3 of the delegate ballots returned and validly voted. Delegate votes shall be conducted by mail or other similar means.

(b)All delegates shall be assigned to the club owner.

(c)Any items put to delegate vote and defeated cannot come up again for 3 years.

(d)Delegate voting may be conducted by paper ballot, electronic balloting, or a combination of both.

CHAPTER 5 – CODE OF CONDUCT

Section 5.1 – Code of Ethics

(a)**Cooperation and good sportsmanship.** One of the objectives of NAFA® is to promote cooperation and good sportsmanship in the training and exhibition of dogs. Cooperation and good sportsmanship should not be recognized in passive observance, but as a way of life in training and competition. Participants shall at all times be courteous and friendly and never conduct themselves in a manner that would bring discredit to flyball. At no time should they show displeasure with a dog, judge, exhibitor, NAFA® representative, sponsor, host, or spectator in or out of the ring.

(b)**Training methods.** Training and exhibiting shall be carried out by such methods that keep in the best interest of the dog and flyball.

(c)**Mistreatment of dogs.** Abuse, severe disciplining of a dog, or running a dog that is under the minimum age as specified in Section 3.2 – Clubs, Teams, Time Sheets, and Warm-up Only (g) (RR) is not in the best interest of flyball.

(d)**Misconduct.** Misconduct shall include, but not be limited to, abusive or foul language, demonstration of dissatisfaction with a judge's decision, inhumane treatment of a dog, racing a dog who is not in adequate physical condition for the number of heats the dog is asked to run, demonstration of poor sportsmanship, willful violation of the rules with the intent to gain an unfair advantage, or any other behavior or altercation that would leave a spectator or exhibitor with an unfavorable opinion of flyball.

(e)**Rules of Racing and Corporate Policies & Procedures.** Participants shall always follow the Rules of Racing and Corporate Policies & Procedures, showing knowledge and an understanding of the same.

(f)**Filing Protest or Charges.** Any individual or club in good standing with NAFA® may file a protest or prefer charges against another individual or club for alleged misconduct, in or out of the ring, prejudicial to the best interest of flyball as provided for under Section 5.2 (CP&P). Protests filed during competition should be done in such a manner as not to bring discredit to flyball.

(g)**Warnings.** Regional Directors should warn teams and file unsportsmanlike conduct charges if teams are obviously and repeatedly holding back their dogs in tournaments to gain an unfair advantage.

Section 5.2 – Discipline

(a)**Charges.** Anyone in good standing with NAFA® may prefer charges against another for conduct prejudicial to the best interest of flyball. Written charges must be filed with the Board of Directors with a $100.00 fee USD or CDN, which will be forfeited if the charges are not sustained.

(b)**Hearing.** The Board of Directors shall set a date, time, and place to consider the charges. Both the accused and the complainant shall be notified as to the date, time, and place of the hearing.

(c)**Discipline.** Should the charges be sustained, after hearing all the evidence presented, first by the complainant and second by the accused, by a majority vote, the Board of Directors may suspend or place on probation the defendant from all NAFA® benefits and privileges. Accused individuals who are also members of the Board of Directors may not vote in such cases of discipline.

(d)**Confidentiality.** Any and all information, oral and written, created, gathered, received, or compiled through the course of processing a complaint is to be treated as confidential by both the accused and the complainant, their representatives, witnesses, and all persons dealing with the complaint pursuant to this policy. Breaching confidentiality may result in disciplinary action of the individual in breach. A breach of the confidentiality by current board members may result in removal from the board. This requirement also remains in effect for all board members even when they cease to be a member of the Board of Directors.

Section 5.3 - Pre-hearing

Preliminary Investigation

(a)The NAFA® Board of Directors' Disciplinary Committee or their appointee(s) shall investigate all complaints and make a preliminary determination. The Disciplinary Committee shall determine whether, if proven true, the action was prejudicial to the sport and whether it occurred at or in connection with the NAFA® sanctioned event:

(i)This preliminary determination shall be made within 30 days of receiving the complaint.
(ii)The Disciplinary Committee shall give a copy of the complainant's statement to the accused and request a reply from the accused within 14 days.
(iii)At the discretion of the Executive Director and the Disciplinary Committee, an informal resolution may be instituted.

Informal Resolution

(b)If the Executive Director and the Disciplinary Committee wish to attempt resolution of the complaint on an informal basis, this may include the following:

(i)The complainant talks to the accused about the behavior.
(ii)A member or members of the Disciplinary Committee talk to the accused about the

behavior.

(iii)A member or members of the Disciplinary Committee act as informal mediators between the complainant and the accused.

(c)If the complaint is resolved informally to the satisfaction of the Disciplinary Committee, the complainant, and the accused; or if the complainant decides to withdraw the complaint, the Disciplinary Committee will make careful notes of the actions taken, no report shall be published, and the fee shall be refunded.

(d)If informal resolution is not instituted or not successful, the complaint will be brought before the Board of Directors by the Disciplinary Committee for review.

Notice of Hearing

(e)If following the preliminary investigation, it is determined that the alleged misconduct, if proven true, would be prejudicial to the sport and that it occurred at or in connection with a NAFA® sanctioned event, then the accused must be advised of:

(i)the charges and specific conduct alleged to be prejudicial to flyball;

(ii)where and when the hearing will be held:

1. This should be the soonest of when the complainant, accused, and the Disciplinary Committee are all available to meet.
2. At the discretion of the committee, the hearing may be held electronically, by email or video conference.
3. The complainant and/or accused may choose to not attend. Their attendance will have no bearing on the decision of the committee.

(iii)when and where the alleged misconduct occurred;

(iv)their rights to be present, to testify, and to present witnesses;

(v)if the accused prefers, they may present their defense in writing;

(vi)the accused shall be advised to review Chapter 5 – Code of Conduct (CP&P).

(f)The accused will be given thirty days to secure witnesses and prepare a defense

Section 5.4 - Hearing

(a)For the purposes of this hearing the NAFA® Board of Directors shall be known as "the committee". The Chairperson of the NAFA® Board of Directors shall be the Chairperson of the hearing.

(b)The Chairperson introduces themselves and the members of the committee and designates one member to keep a record of the proceedings.

(c)The Chairperson advises the accused of the specific charges.

(d)The Chairperson advises the accused of their right:

(i)to hear, confront, and question all witnesses present; if witnesses are not present, written statements obtained will be relied on;

(ii)to present witnesses on their behalf;

(iii)to testify on their behalf.

(e)The Chairperson shall determine and list witnesses to be called by the committee and the accused.

(f)The Chairperson excuses all persons except the committee, the accused, the complainant, and the witnesses.

(g)The Chairperson shall call each witness independently, first those named by the committee and then those named by the accused. The Chairperson shall ascertain the full name and address and preferred contact information of each witness as they are called. The Chairperson shall question the witness and then allow the accused and complainant to question the witness.

(h)After all witnesses have testified, the Chairperson shall permit the accused to make a final statement in response to the charges.

(i)The Chairperson shall then excuse all persons except the committee. The Chairperson shall ask the accused to remain available to receive the committee's decision.

Section 5.5 - Post-Hearing

(a)After deliberation and by majority vote, the committee shall determine whether:

(i)the charged conduct has been proven;
(ii)such conduct was prejudicial to the best interest of the sport of flyball; and
(iii)the charged conduct occurred in connection with or during the progress of a NAFA® sanctioned event.

(b)If any of Sections 5.5 (a), (i), (ii), or (iii) are not proven, the committee shall dismiss the charges. If Section 5.5 (a), (i), (ii), and (iii) are proven to be true, the committee may suspend the accused from all NAFA® membership or take other appropriate disciplinary action, and refund the filing fee.

(i)After the committee makes its decision, the Chairperson shall:
(ii)If possible, immediately notify the accused of the committee's decision and any discipline taken;
(iii)notify the accused, in writing, by registered or certified mail, of the committee’s decision and any discipline taken, and;
(iv)prepare a complete report of the proceedings for the records and send a duplicate copy of the report to the accused and the complainant

Section 5.6 - Appeal

(a)**Time limit.** A complainant or accused who wishes to appeal the decision from the hearing may initiate an appeal not more than 30 days after the date they receive notice of the committee’s decision.

(b)**New information**. An appeal will only be considered if there is significant new information

that was not available at the time of the hearing.

(c)**Appeal Panel**. Upon receipt of the notice of appeal, an Appeal Panel will be formed consisting of the Executive Director and the Executive Committee. The Appeal Panel will:

(i)set a date for a closed hearing, to be held within 30 days;
(ii)notify the complainant and the accused of the hearing date;
(iii)review all documents submitted along with any new, significant information not available at the time of the original hearing.

(d)**Possible outcomes**. The Appeal Panel may, by a majority vote of its members:

(i)dismiss the appeal
(ii)substitute its own decision for that of the committee

(e)**The Appeal Panel's decision is final**. Within 14 days of completing a hearing, the Appeal Panel shall send notice of its decision, and the reasons for such decision in writing to the complainant and accused.

(f)**Decision and recommendations.** The Disciplinary Committee shall implement the Appeal Panel's decision with respect to the appeal and may accept and implement any or all of the Appeal Panel's additional recommendations.

Section 5.7 – Probation and Suspension

(a)**Probation:** The Board of Directors may place an individual or a club on probation for a specific length of time, not to exceed one year.

(i)While on probation, the individual or club is not considered in good standing. Therefore, a club may not sanction or host a tournament while on probation.
(ii)A club is not eligible for any regional champion placements or overall club champion placements for any racing year during which they were on probation. A club that is on probation will not be awarded regional points for any portion of a racing year at any tournament at which they compete. The points will be awarded to the next highest placing team in good standing.
(iii)Any individuals on probation are not eligible to judge or act as regional director, Executive Director, Board member, tournament director, or tournament secretary during the term of their probation.
(iv)Individuals on probation are not eligible for nomination or election to Executive Director, Board of Directors, Judge of the Year, nor are their dogs eligible for nomination or election for Hall of Fame or Regional MVP.
(v)Individuals and clubs on probation may still participate in NAFA sanctioned events.

(b)**Suspension:** The Board of Directors may place an individual or club on suspension for an indefinite period of time and shall require a petition to be reinstated.

(i)While on suspension, the individual or club is prohibited from participating in, sanctioning, or attending NAFA events in any capacity and are not considered in good

standing.

(ii)Clubs or individuals on suspension are not eligible to register dogs, clubs, accrue dog points, accrue dog titles, or compete in any way.

(iii)Individuals on suspension are not permitted to judge or act as a regional director, Executive Director, Board member, tournament director, or tournament secretary during their suspension.

(iv)Individuals on suspension are not eligible for nomination or election to Executive Director, Board of Directors, Judge of the Year, nor are their dogs eligible for nomination or election for Hall of Fame or Regional MVP.

(v)A club is not eligible for any regional champion placements or overall club champion placements for any racing year during which they were on suspension.

(c)**Executive Director Authority:** Pursuant to the Bylaws, the Executive Director has the power to suspend or place on probation individuals or Clubs from all NAFA benefits and privileges for infraction of NAFA® Rules of Racing or Corporate Policies and Procedures subject to ratification by the Board of Directors at its next regular or annual meeting. This power is non-delegable.

(i)A Regional Director may give a warning to a tournament director, club, individual, or judge within their region for violating NAFA® Rules of Racing and Corporate Policies & Procedures or for conduct prejudicial to flyball. The warning, whether oral or written, must be documented and forwarded to the Executive Director.

(ii)A second warning for the same or similar violations or for conduct prejudicial to flyball shall be reported to the Executive Director who shall forward it to the Board of Directors for appropriate action.

Section 5.8 - Aggressive Dogs

(a)**In the ring or during measuring.** If a dog shows undue aggression at any time in the ring or during measuring, the head judge may excuse the dog from the competition.

(b) **At an event**. If a dog shows undue aggression at any time outside of the ring in conjunction with a NAFA event, the Regional Director may excuse the dog from the event regardless of entry in the competition.

(c)**Excusal form**. Excusal from the competition or event must be reported on NAFA® Form C.12.

(i) The NAFA official excusing the dog is responsible for sending the completed form to NAFA® within ten days of the incident.

(ii)Ordinarily, the Regional Director and dog owner/ handler (and/or club owner) receive a copy of the incident report at the tournament. In the event this is impracticable, copies shall be distributed to those individuals within ten days of the incident.

(d)**Review process**. Once received by NAFA, the completed C.12 form shall be distributed to a Review Panel consisting of the Executive Director, the Chair of the Board of Directors,

and the Chair of the Judges Committee. Members of the Panel shall be impartial and shall comply with Section 9.3 - Conflict of Interest Policy (CP&P). If the form does not comply with the rules, it shall be returned to the head judge, dog owner, and Regional Director with the deficiencies noted. Any deficiencies must be cured by the head judge within ten days of receipt. At the time that the Review Panel accepts the aggression excusal, it will send written notice to the dog owner (and/or club owner).

(e)**Appeal of excusal.** Any appeal by the dog owner of an aggression excusal must be submitted in writing to the Review Panel (Executive Director, Chair of the Board of Directors, and Chair of the Judges Committee or their substitutes if a conflict exists) with the required processing fee within 30 days of notification by the Review Panel. If any appeal is filed, a copy must be provided to the head judge. The Review Panel's decision to sustain an aggression excusal is final. The Review Panel's decision to overrule an aggression excusal expunges that excusal and the processing fee is refunded. The Review Panel shall issue a report at the next meeting of the Board of Directors regarding any aggression excusals received and any action taken for inclusion in the meeting minutes to be published on the NAFA webpage.

(f)**Removal of excusal**. A dog with one excusal for aggression may submit a request to have that incident removed from their record. The request must come no earlier than 3 years from the date of excusal and the dog must have participated in a minimum of 10 weekends of tournaments since its excusal with no further incidents. The request shall be submitted in writing to the Disciplinary Committee. The Disciplinary Committee will make a formal recommendation to the Board of Directors regarding a request for removal. A majority vote of the Board is required to sustain a removal. A dog may have only one aggression excusal removed.

(g)**Second Excusal**. A dog will be barred from future competition immediately upon the second excusal for aggression. Any dog listed on a time sheet at a subsequent tournament after receiving a second aggression excusal will result in the penalties set forth in Section 7.5 - Penalties for Ineligible Dogs Running (CP&P).

(h)**Reinstatement process**. An application for reinstatement may be submitted after a period of one year. The application should be submitted in writing to the Disciplinary Committee. The Disciplinary Committee will make a formal recommendation to the Board of Directors regarding a request for reinstatement. A majority vote of the Board is required to reinstate a dog. No more than one request for reinstatement may be filed in one year. In the event that a reinstated dog has an additional aggression excusal, the dog will be immediately barred from future competition and no further requests for reinstatement will be permitted.

Section 5.9 – Publishing of Disciplinary Action

NAFA® will publish on the website all individuals, dogs, and/or clubs that have disciplinary actions in effect against them, to include the name, effective date, action taken, and offense while the punishment is in effect.

CHAPTER 6 – HOSTING A NAFA® SANCTIONED EVENT

Section 6.1 – Requirements

(a)NAFA® sanctioned tournaments may only be hosted by NAFA® or NAFA registered clubs in good standing. The host club must follow current NAFA® Rules of Racing and Corporate Policies & Procedures. Any club in good standing may be considered for sanctioning. At least fifteen days prior to the start of a tournament held in the United States, the NAFA Tournament Sanctioning Secretary must receive a certificate of liability insurance listing NAFA as an additional insured for that tournament with limits of at least $1 million general liability per occurrence. In the event the Tournament Sanctioning Secretary does not receive a certificate of insurance with coverage as stated above, the tournament sanctioning will be revoked. The first club to apply for sanctioning with a valid sanctioning request will receive sanctioning unless the weekend meets the criteria for a reserved weekend by another club.

(b)Reserved Weekends

(i)A club establishes a reserved weekend by hosting a tournament on the same weekend number at the same venue for two consecutive years.

(ii)NAFA will assign weekend numbers with weekend number one starting with the first Friday in the month of October.

(iii)The maximum number of weekends a club may have reserved is two per NAFA Racing year.

(iv)A club loses its reserved weekend status when the club fails to hold a tournament on the same weekend number at the same venue for two consecutive years.

(v)Clubs with reserve weekends must apply for sanctioning a minimum of 25 weeks before the tournament weekend. After the 25-week deadline, any club per paragraph 6.1 (a), above, may receive sanctioning.

(vi)Reserved weekends cannot be transferred to another club. The first club listed as host flyball club on the valid sanctioning request will be considered the host flyball club for reserved weekend purposes.

(c)NAFA will only consider valid sanctioning requests two years in advance of the tournament date.

(d)NAFA is committed to maintaining flyball as a sport for all dogs. NAFA tournaments are open to all dogs without regard to whether the dog is a mixed breed, a pure bred or any particular breed. NAFA will not sanction a tournament at a site that excludes dogs on the basis of breed unless the exclusion is mandated by governmental law or ordinance and the host club has attempted and been unable to qualify for an exemption to governmental exclusions. A host club shall inform NAFA of any such laws or ordinances when sanctioning is requested. It is the host club's responsibility to keep the sanctioning request current on all legislation and ordinances that affect the tournament. The host club shall finalize all such event limitations 60 days prior to the event closing.

(e)Applications for sanctioning of tournaments must be received by NAFA at least thirty (30) days prior to the closing date.

(f)NAFA will not sanction a tournament within 200 road miles of a previously sanctioned NAFA tournament, without written approval from the sanctioned tournament's club owner.

(g)The host club must submit a complete application (NAFA Form C.3) or complete the online sanctioning form. The entry fee shall be stated on a per team basis. The host club must request and obtain written approval from NAFA for any special or unusual request.

(h)Tournaments will not be sanctioned by NAFA where a permanently covered dirt racing surface is commonly used for housing cattle, swine, or poultry.

(i)All seeding and placing of teams in divisions is to be approved by the Regional Director.

(i)Whenever it is necessary to seed a division of fewer than 4 teams, the division shall be combined with an adjacent division for race scheduling purposes, unless permission is received from the Executive Director. If an elimination format is used, the divisions shall not be combined for that portion of the schedule. Division placements and breakout times for each individual division still apply.

(ii)The Regional Director shall receive seeding, a proposed schedule and tournament formats from the tournament director no later than 10 calendar days before the tournament. Failure to comply with this requirement shall result in a penalty of $50.00 USD to the host club, unless the Executive Director approves an extension due to extenuating circumstances.

(j)All clubs registered with NAFA® are to be notified of the date, time and location of the tournament, and the name and phone number of the contact person, prior to the closing date.

(k)Limited Classes: A tournament may be sanctioned with some classes limited and others unlimited. At sanctioning, the host club must designate the classes offered and their limits, if any. The host club may not limit any class to fewer than four teams. Seed times for teams in limited classes are not required until the team is accepted into the class via random draw or otherwise. The host club must accept all entries up to 6:00 p.m., local time of the Tournament Secretary, on the closing date. Entries will be selected into a class by random draw when entries for the class exceed the sanctioned limit. When entries for one or more classes exceed the sanctioned limit, and entries for one or more classes do not meet the sanctioned limit, the size of the classes that have excess entries will be expanded by the automated draw to add excluded teams up to the maximum declared total number of teams permitted in all limited classes.

(i)The Draw shall be conducted via the NAFA® website, using the online lottery system. The draw must take place within 72 hours of the closing date of the tournament. Teams are to be grouped into rounds – each round shall contain only one team from each club: the first round will contain one team from every club; the second round will contain one team from every club that has entered two or more teams; the third round will contain

one team from every club that has entered three or more teams; etc., until all rounds are created. Teams will be randomly drawn from the first round, then the second round, etc., until the class is filled. The host club (the club that applied for sanctioning) will be the first team to be drawn during the first round (guaranteed one entry for each limited draw class). Co-host clubs are not guaranteed an entry. The remaining teams will also be drawn and given an alternate number, starting with alternate one until all rounds are drawn from and every team either is in the class or is given an alternate number. If the number of teams that enter the limited class is less than or equal to the limit, then no draw is required and all teams gain entry into the class; however, clubs are to be notified and clubs must respond per (ii) and (iii).

(ii) Notification of the Draw: All clubs shall be notified of the results of the draw within 48 hours of the draw. Notification can be done by telephone, facsimile, email or posting to the host club's website.

(iii) Club Notification of the Team Entry: All clubs shall notify the host club of seed times of all teams entered and of teams they wish to withdraw within 96 hours of the draw. If a club withdraws a team that has gained entry into the class, an alternate team will be selected. Alternate teams will be selected based on the order of the draw.

(iv) If any limited class in an event requires a draw, then all limited classes in that event must be drawn.

(v) If the Executive Director determines that the draw was completed incorrectly, then the draw for the entire event will be repeated.

(vi) If any class(es) does not meet the sanctioned limit after the 96-hour mark due to teams having withdrawn, and other classes still have alternates, the Tournament Director or Tournament Secretary should contact the Executive Director for manual reallocation of the vacant slots to the other classes.

(l) Prize money for any one team may not exceed $500.00 USD per event per day.

(m) The following items will be sent to NAFA electronically within 14 days after the tournament:

1. NAFA Recording Fees:
   a. $25 USD per scored team for single day tournaments;
   b. $38 USD per scored team for tournaments lasting more than 1 day;
   c. When multiple tournaments hosted by the same club occur on successive days, the full fee is due for the tournament with the largest entry and $12 USD per team may be deducted from each additional tournament.
2. completed Tournament Results Form (NAFA Form C.6);
3. if applicable, any statements with respect to conduct prejudicial to the sport of NAFA flyball;
4. if applicable, any protest(s);
5. a copy of the original C.2 (time sheets), either printed or electronic, must be retained by the host club for at least 1 year following the tournament;
6. an electronic copy of the original C.9 (jump heights form). The original must be

retained by the host club for at least 1 year following the tournament and the C.9 information must be entered into the NAFA database.

(n)The following penalties will be applied when recording fees, time sheets, jump height forms, and tournament results are not sent to NAFA within 14 days after a tournament.

(i)15-29 days after a tournament: A late fee of $25 USD will be charged;
(ii)30-59 days after a tournament: An additional $25 USD late fee will be charged (for a total of $50 USD);
(iii)60-89 days after a tournament: The club and the club owner are put on probation for a period of 1 year;
(iv)90 days or more after a tournament: The club and the club owner are suspended. Any suspended club must request reinstatement from the Board of Directors.

(o)Any tournament sanctioned by NAFA must use a NAFA approved head judge at the provisional level or higher.

(p)NAFA reserves the right to deny or revoke tournament sanctioning in the event that the tournament proposed would not be in the best interest of NAFA. This includes, but is not limited to, sanctioning an event at the same venue, on the same weekend, as an event scheduled by another flyball sanctioning organization.

Section 6.2 - Classes of Competition

(a)NAFA® recognizes five classes of competition: Regular, Multibreed, Open, Veterans and Non-Regular.

(b)The NAFA® Regular class of competition includes teams made up of any breed(s) of dog and/or mixed breeds and **must be offered at every sanctioned tournament**.

(c)**Non-Regular Class**. A Non-Regular class (Pee-wee, four-of-a-kind, etc.), is any class other than the NAFA® Regular, Open, Veterans or Multibreed class and must be approved by the Executive Director.

(d)**Multibreed Class**. In the Multibreed Class, each team running in a heat must consist of dogs of four different breeds, or three different breeds and a mixed breed. A dog's breed or status as a mixed breed must match what is declared on the dog's CRN pursuant to section 3.1(b) of the NAFA Rules of Racing.

(e)**Open Class**. The Open Class is subject to all existing NAFA® Rules of Racing and Corporate Policies and Procedures except that the 87 day rule stated in Section 7.4 - Changing Clubs (CP&P) does not apply to the Open Class. The Open Class is subject to the following additional specific rules:

(i)**Other Classes or Time Sheets**. A dog that is listed on a time sheet for a team in the Open Class may be listed on the time sheet for one additional team in another class on the same day, except in circumstances where a second entry would be prohibited by paragraphs 6.2(g) or (h).

(ii)**Club Affiliation**. A dog's club affiliation is not affected by reason of running in the Open Class.

(iii)**Seeding**. The preference for divisions comprising at least four teams shall not apply to the Open Class. In consultation with and with the approval of the Regional Director, the host club may utilize a racing schedule that has teams in the Open Class compete with teams in the Veterans Class.

(iv)**Record Times and NAFA® Seed Times**. The rules governing world records stated in Section 7.1 – World Record Times (CP&P) do not apply to the Open Class. A team running in the Open Class is not eligible to set a NAFA® World Record; Teams running in the Open Class shall be eligible for points and tournament placements within the Open Class. However, times set by a team running in an open class shall not be entered into the NAFA® Database as club or in region times. As with the Veterans Class, a separate roster may be established on the website to report times for teams competing in the Open Class.

(v)**Jump Heights.** In the Open Class, jump heights shall be set at any height not below the minimum and not exceeding the maximum height stated in Section 8.2 – Jump Heights (RR).

(f)**Veterans Class**. In the Veterans Class, every dog on the team must be at least 7 years old. The Veterans Class shall be subject to the following additional rules:

(i)**Race Schedule**. The race schedule in the Veterans Class shall not call for more than a total of 16 possible heats per day, and the racing format shall not include a 5/5 or more strenuous format;

(ii)**Jump Heights**. In the Veterans Class, jump heights shall be set at the minimum height stated in Section 8.2 – Jump Heights (a) (RR), without regard to the height of the racing dogs.

(g)No dog shall be listed on more than one time sheet in any given class of competition. A dog listed on a time sheet in the Veterans Class at a tournament may not be listed on a time sheet for any other class of competition in that tournament unless the classes are scheduled so as to be run on separate days to a maximum of one additional class.

(h)Dogs may not compete in more than one class at a NAFA® sanctioned tournament except:

(i)When the tournament's regular class is unlimited or;

(ii)When all entries received for a tournament's limited entry regular class are accepted at the conclusion of the automated draw.

Section 6.3 – Format & Schedule

(a)The Regional Director shall approve the tournament format and schedule. The approved format and schedule shall be available to the head judge and all teams entered in the tournament no less than 48 hours prior to the competition. Failure to comply with this requirement shall result in a penalty of $50.00 USD to the host club unless the Executive

Director approves an extension due to extenuating circumstances.

(b)The tournament format includes:

(i)Teams in each division along with the seed time of each team and the breakout time assigned to that division.
(ii)Format of the tournament, i.e., Round Robin with or without Single/Double elimination, and whether the two rounds are added together of not.
(iii)Scoring – how wins and placements are determined; and how tie scores would be broken.
(iv)The Race Schedule shall not call for more than a total of 35 possible heats per day per team.
(v)A race may not consist of more than five heats. Tournament directors will publish the tie breaker for races (for example- fastest time in the race). This includes the elimination rounds.

(c)When running more than one (1) round robin in a division, lane assignments should be reversed for each subsequent round robin.

Section 6.4 - Seeding

Tournaments will be seeded by the times submitted with the team's entry. Multiple entries from the same club for the same class may not use the same seed times. After the closing date, the tournament director will divide the entered teams into divisions. Each division's breakout time will be one (1) second faster than the top team's seed time. Except in Division 1, a team running more than one (1) second faster than the top team's seed time will "break out" of the division and be declared the loser of the heat. If the Electronic Judging System fails or is not used, this rule does not apply. **NOTE:** Tournament time sheets should be marked BO and indicate a loss – the time should still be recorded for the awarding of NAFA® points.

Section 6.5 – Electronic Judging Systems

(a)If there is a shortage of available EJS's for a tournament date, the repeat tournament dates have priority.

(b)If NAFA® owned EJS are not available, NAFA will pay $200.00 USD or CDN to rent a privately owned EJS, if applicable. NAFA will repair any damage to the EJS incurred during the actual tournament for which the EJS was rented by NAFA. Damage reports are to be written by the Regional Director and forwarded to the Executive Director.

(c)NAFA owned EJS may be rented from NAFA for $200.00 USD (provided they are not required at a NAFA Sanctioned tournament), plus the cost of shipping one way. Clubs using NAFA's EJS for demos are liable for all damages that occur during the demo and the shipping from the demo.

(d)NAFA owned EJS may be used for practice one day prior to and on days of the NAFA

sanctioned event for which it is provided with the following requirements:

(i)The EJS is used for practice outside of the racing day.
(ii)No more than 2 dogs are run in succession while using the EJS.
(iii)Use of the EJS is open to all dogs and handlers.
(iv)The host club is liable for all damages that occur to the EJS during this time.

(e)EJS and Recording Fees: Hosts using NAFA EJS must pay NAFA the greater of the recording fees stated in Section 6.1 – Requirements (m) (CP&P) for the tournament weekend, or the following flat rates:

(i)$360.00 USD flat rate for use of one NAFA EJS.
(ii)$1080.00 USD flat rate for use of two NAFA EJS.
(iii)$1980.00 USD flat rate for use of three NAFA EJS.

(f)NAFA EJS shall be shipped out by the host club the day after the completion of the tournament. If the NAFA assigned carrier is closed the day after the tournament, the EJS must be shipped out at the next available day.

(i)A $100.00 USD fine will be imposed on the host club, if EJS is not shipped out the next available day following the completion of the tournament.
A $250.00 USD fine will be imposed on the host club, if EJS is not shipped out the next available day following the completion of the tournament and affects the next tournament

CHAPTER 7 – STANDING RULES OF COMPETITION

Section 7.1 – World Record Times

(a)NAFA® recognizes world record times for teams:

(i)in the Regular and CanAm classes for the NAFA Regular World Record;
(ii)in the Multibreed and CanAm-Multi classes for the NAFA Multibreed World Record.

Qualifying Criteria

(b)A NAFA World Record must meet all of the following criteria:

(i)The heat was run by a team that has not declared itself a Performance team, or For Exhibition Only.
(ii)The heat time was faster than the current NAFA® Regular World Record time or NAFA Multibreed World Record time.
(iii)The heat was timed using a NAFA Board approved EJS;
(iv)The correct jump height was used and is verified in accordance with paragraph 7.1(c);
(v)The box and course have been verified in accordance with paragraph 7.1(d);
(vi)The NAFA World Record heat has been verified by video review in accordance with paragraph 7.1(e);
(vii)A NAFA Form C.13 was properly completed and submitted;

Jump Height Verification

(c)The judge must use NAFA Form C.13 to document verification that the correct jump height was used. This can be verified by one of the following:

(i)The Height Dog has a Permanent Measurement supporting the jump height used during the heat;
(ii)For any Height Dog that does not have a Permanent Measurement (including dogs under 24 months, or any other dog), the NAFA Recorded Measurement, completed at any time during that tournament week, supports the jump height used during the heat.

Box and Course Verification

(d)The judge must use the NAFA Form C.13 to document verification that the box and course meet the following specifications:

(i)All portions of the box are at least 51' from the start finish line and the following conditions are met:
1. No adjustments were made to the position of the box after the last dog made contact with the box;
2. The box loader remained in place (on the box) after the last dog retrieved its ball and until the head judge directed them to leave;

(ii)The box has been tested with all sizes of balls used in the heat, and is verified to meet the specification in Section 1.1 – Flyball Boxes (d) (RR);
(iii)Box dimensions meet NAFA standards: it must be measured at this time unless it was previously measured at the tournament;
(iv)Jump placement is within two inches (2") of the jump-set line;
(v)The minimum height of all the jump boards (measured for height across the inside width) is no more than one quarter inch (1/4") lower than the minimum height for the run in question;
(vi)No adjustments to jumps or jump boards have been made during or after the heat;
(vii)The EJS is properly aligned with the start/finish line.

Video Verification

(e)Video requirements:

(i)The video must be unedited;
(ii)The video must be stationary and in line with the start finish line, with a clear view of the start/finish line, sensor poles, and the light tree.

Video Review by Board of Director Representatives

(f)The video review shall:

(i)be performed by a minimum of two neutral Board of Directors' members;
(ii)include timing with a stopwatch to confirm that the recording is of the actual run in

question;

(iii)verify the following:

1. There are no pass/exchange infractions.
2. The electronic judging system shows no errors or faults.
3. All dogs have carried their ball over the finish line.

(g)The video and the World Record C.13 Form must first be forwarded to the Executive Director, who will coordinate the review process;

(h)The Executive Director must receive the video and C.13 Form within 14 days of the run in question.

(i)A qualifying record will be confirmed by NAFA within 14 days of receipt of the video and necessary documentation.

(j)If all NAFA® World Record criteria are met, all members of the Board of Directors reviewing the video should sign and date the C.13 Form to certify the time as a new official NAFA World Record.

Section 7.2 – Racing Year

NAFA's® racing year is October 1st through September 30th.

Section 7.3 – Meaningless Heats

Heats that are meaningless to the outcome of a sanctioned tournament are not to be run just for the sake of allowing teams to accumulate more points toward flyball titles.

Section 7.4 – Changing Clubs

(a)If a dog has earned points in the regular or multi-breed class with a NAFA® club in a NAFA sanctioned tournament, the dog may not be listed on a time sheet with a different NAFA club in the regular or multi-breed class for a period of 87 days. The 87 day wait period shall begin the day after the end date of the last day of a tournament in which the dog earned NAFA points. The dog will be eligible to be listed on a time sheet with a different club in a class of competition that starts the day after the 87 day waiting period. A dog must be eligible to race at the beginning of a class of competition to be included on the time sheet.

(b)The 87 day rule stated in paragraph 7.4 (a) above does not apply to the Veterans or Open Classes, or to dogs listed as warm-up only on a time sheet. A dog running in the Veterans or Open Class, or a dog listed as warm-up only shall retain its existing club affiliation

Section 7.5 – Penalties for Ineligible Dogs Running

(a)Any dog(s) listed on a time sheet in violation of Chapter 3 – Dogs, Teams and Time Sheets (RR), Chapter 7 – Warm-ups (d) (RR), Section 6.2 – Classes of Competition (g) and (h) (CP&P) and Section 7.4 – Changing Clubs (CP&P), or any appendices pertaining to eligibility will cause team(s) with dog(s) violating these rule(s) to:

(i)be ineligible for placements;

(ii) forfeit all NAFA points earned prior to the discovery of the violation. Note: after the violation is corrected, affected team(s) are eligible to earn NAFA points.

(b) Failure to record a jump height on a C.2 form alone does not trigger the penalties specified in this section and does not require forfeiting of heats.

Section 7.6 – Breed Challenge Process

(a)A dog's breed may be challenged once during the lifetime of the dog. A dog designated as a "mix" is not subject to a breed challenge. The challenge process is completely anonymous.

(b)To bring a challenge, a person must submit a completed Form C.22 and any supporting documentation to the Executive Director including the $100 (USD) non-refundable challenge fee.

(i)If a dog's owner changes the dog's breed designation as provided in Section 3.1 – Dog Registration (CRNs) (b) (RR), a challenge must be submitted within one year of the breed change.

(c)On receiving a breed challenge, the Executive Director shall verify its sufficiency and promptly forward the challenge to the owner shown on the CRN and request a response within 30 days from the date the owner receives the challenge, or such additional time as the Executive Director may allow for good cause shown.

(d)An owner who receives a breed challenge may:

(i)Establish the dog's breed by furnishing either:

1.A pedigree, including at least three (3) generations, establishing the dog as a breed recognized by a kennel club listed in Section 3.1 – Dog Registration (CRNs) (b) (RR); or

2.An ILP/PAL or the equivalent issued by a kennel club listed in Section 3.1 – Dog Registration (CRNs) (b) (RR);

(ii)Concede the challenge either by changing the breed designation listed on the dog's CRN to a mixed breed or by establishing a different breed pursuant to paragraph 7.6 (d)(i) above; or

(iii)Request a NAFA breed review. Such a request must be in writing and be accompanied by at least three identical packets each containing 3 current photographs of the dog, providing an unobstructed view of the dog from both sides and a frontal view, and any other written material, including affidavits or declarations from recognized breeders or conformation judges, that the owner wants the NAFA breed review panel to consider.

(e)If the dog's owner does not timely respond to a breed challenge or to a request for additional photographs by a breed challenge panel, the breed designated on the dog's CRN will be changed to "mix."

(f)Upon timely receipt of the breed review packets, the Executive Director shall distribute it to a Review Committee. The committee shall review the packets within fifteen (15) days of receipt.

(g)Review Committee;

(i)The Executive Director may designate a representative for their role in the challenge if they perceive a conflict of interest with the dog being challenged.

(ii)A Review Committee of 3 will be formed for each breed challenge.

(iii)Members of the committee shall be impartial and shall comply with Section 9.3 - Conflict of Interest Policy (CP&P).

(iv)The committee shall consist of three (3) members who have specific knowledge of the challenged dog's breed by being either an established breeder of that breed, a qualified conformation judge of dogs in that breed, or another expert in the breed.

(v)The committee will work within executive session. All documentation produced by the committee shall be destroyed by the committee once the final result has been reported to the Executive Director or his designate and the Board of Directors.

(vi)The committee shall review the packets and make one of three findings (by majority vote). They will report their findings to both the Executive Director or their designate and the Board of Directors:

1. The packet is insufficient for the purpose intended and what its deficiencies are.
2. The packet is acceptable and is consistent with the current listed breed and recommends that the current breed be sustained.
3. The packet is acceptable and is not consistent with the current listed breed and recommends that the current breed be changed to "mix".

(vii)A photo or other documentation that is visually unclear, from a poor angle or other information where the source is unclear are some of the reasons a packet may be deemed insufficient by the committee.

(h)The Executive Director shall implement the recommendations of the Review committee within 10 calendar days of the receipt of the committee's assessment by:

(i)Notifying the dog owner that the first packet was unacceptable with an explanation of its deficiencies and an acceptable packet is required within 30 days. If an acceptable video has not been submitted within the extended 30 day period, the breed will be changed to "mix".

(ii)Notifying the dog owner in writing that the breed has been sustained or overturned.

(i)Challenge Publication: NAFA® will publish all dogs whose breed is challenged including the CRN, the date of the challenge and the final result (sustained or changed) and the final breed designation.

(j)No other penalties shall be pursued other than the breed of the successfully challenged dog shall be changed to "mix."

CHAPTER 8 – AWARDS

Section 8.1 – Points

(a)**NAFA Points**. Each time a team races in a NAFA® sanctioned flyball tournament with a recorded time under 24 seconds, each dog racing in that heat will receive 25 points toward a flyball title; under 28 seconds each dog racing in that heat will receive 5 points; under 32 seconds each dog racing in that heat will receive 1 point; provided that a NAFA® judge is present and at least four teams compete. Each of the four teams must actually compete. All four teams may be from the same club provided each team registered with NAFA® was given an equal opportunity to enter but chose not to.

(b) **First Place Bonus Points**. In the Regular Class, each dog on the first-place team in each division shall be awarded bonus points equal to 20% of total NAFA points earned by the dog, rounded down to the nearest whole number. Note: the bonus points are awarded to a first-place team, regardless of the club's home region.

(c)**Multibreed Points**. When a team races in the Multibreed Class, the dogs earn an equal number of multibreed points. Multibreed points are not earned by performance teams.

Section 8.2 –Titles

(a)**NAFA Point Titles**. Titles and awards are earned as detailed in the table below:

Flyball Titles				
Points Earned	**Title Awarded**	**Certificate**	**Pin**	**Plaque**
20	FD – Flyball Dog	Yes	No	No
100	FDX – Flyball Dog Excellent	Yes	No	No
500	FDCh – Flyball Dog Champion	Yes	No	No
1,000	FDCh-S – Flyball Dog Champion–Silver	Yes	No	No
2,500	FDCh-G – Flyball Dog Champion–Gold	Yes	No	No
5,000	FM – Flyball Master	Yes	Yes	No
10,000	FMX – Flyball Master Excellent	Yes	Yes	No
15,000	FMCh – Flyball Master Champion	Yes	Yes	No
20,000	ONYX	No	Yes	Yes
30,000	FGDCh -- Flyball Grand Champion	No	Yes	Yes
40,000		No	Yes	Yes
50,000 – 90,000		No	Yes	Additional plate every 10,000 points
100,000	Hobbes	No	Yes	Yes

(b)**Multibreed Point Titles.** Multibreed titles and awards are earned as detailed in the table below:

Flyball Multibreed Titles

Points Earned in Multibreed	Title Awarded	Certificate	Pin	Plaque
20	MBD – Multibreed Dog	Yes	No	No
100	MBDX – Multibreed Dog Excellent	Yes	No	No
500	MBDCh - Multibreed Dog Champion	Yes	No	No
1,000	MBDCh-S - Multibreed Dog Champion–Silver	Yes	No	No
2,500	MBDCh-G - Multibreed Dog Champion–Gold	Yes	No	No
5,000	MBM - Multibreed Master	Yes	Yes	No
10,000	MBMX – Multibreed Master Excellent	Yes	Yes	No
15,000	MBMCh – Multibreed Master Champion	Yes	Yes	No
20,000	MB ONYX	No	Yes	Yes
30,000	MBGDCh – Multibreed Grand Champion	No	Yes	Yes
40,000		No	Yes	No
50,000		No	Yes	No
60,000+	No additional titles	-	-	-

Section 8.3 – Iron Dog Award

A dog earning at least one NAFA® point in ten consecutive Racing years is awarded the NAFA Iron Dog title. An Iron Dog plaque is awarded. All dogs eligible to be listed on a time sheet in FY2020 and FY2021 received credit towards the Iron Dog Award for each year.

Section 8.4 - Regional Champions

(a)At the end of each racing year, NAFA® will name regional champions in the regular and multibreed classes for each region and commemorate this achievement by awarding a plaque. Second and third place clubs in the regular and multibreed classes for each region will be recognized by awarding a certificate.

(b)**Good standing**. A club that is not in good standing during any time of the racing year is not eligible for regional placements.

(c)**Disbanded club**. If a club disbands before the end of a racing year, it is not eligible to win a regional championship.

(d)**Regional points and tie-breaks**. Regional champions are determined by points earned by a club during the racing year and, in appropriate cases, by the tie-break formula set out below:

(i)**Points towards regional championships accrue to a club.** Only one team from each club will qualify for regional championship points in the same class at a tournament (i.e., Points are awarded only to the top placing team from a club. If another team(s) from the same club also places in the top 3, the points are not awarded for that placement). A club fielding teams in both the regular and multibreed classes of competition may accumulate points in each separate class.

(ii)**Points for placements**. Point towards regional championships are awarded based

on overall placements of in-region teams in an event based on the following point structure, to maximum of 30 points:

1. Top Finishing Regional Team 3 points
2. 2nd Place Regional Team 2 points
3. 3rd Place Regional Team 1 point

(iii)**In-region only**. All points and tie-break times for regional championships must be earned in the club's home region, i.e., an "in-region" team.

1. A club's home region, absent a written request for change, is the place of residence of the club owner recorded in the NAFA database.
2. A club may change regional affiliation by written request to NAFA®.
3. Requests to change regional affiliation to an adjacent region must be received before the start of the racing year to take effect that year.
4. A host club's regional affiliation shall determine the region in which regional points accrue for tournaments hosted by that club, except when the tournament is hosted more than 200 road miles outside the regional border, in which case the regional points will accrue for the region where the tournament is geographically located.

(iv)**Club eligibility**. A club must compete in a minimum of four tournaments in separate tournament weeks within its home region in the class for which the regional championship is awarded, one of which must qualify for regional points.

(v)**Class eligibility**. Classes must meet all of the following criteria to qualify for points and/or tie-breaking times to count toward regional championships:

1. Have a minimum of four teams competing for Regular Class;
2. Have a minimum of three teams competing for the Multibreed Class;
3. Include all clubs at the conclusion of the automated draw;
4. Regular classes limited to fewer than 20 teams shall include all teams at the conclusion of the automated draw;
5. Multibreed classes limited to fewer than 12 teams shall include all teams at the conclusion of the automated draw.

(vi)**For regions that host 7 or fewer tournament weeks** in which events qualify for regional points:

1. Clubs accumulate regional points from up to 80 percent, but no less than one, of the tournaments that qualify for regional points. The calculation of tournaments for which a club may accumulate points is rounded down to the next whole number. Note: the number of tournaments held in a tournament week is irrelevant.

   Example: if a region has a total of 9 tournaments in the racing year held on 5 tournament weeks, 80 percent of that would equal 7 tournaments (7.25 rounded down to the next whole number). Points towards regional championships would accrue from the best 7 finishes for any given club against in-region team competition.

2. Points are accrued from a maximum of 10 tournaments
3. Points are accrued based on a club's best finish
4. Clubs can accrue points from multiple locations in the same tournament week.

(vii)**For regions that host more than 7 tournament weeks** in which events qualify for regional points:

1. Clubs accumulate points from up to 80 percent of tournament weeks which qualify for regional points. The calculation of tournament weeks for which clubs may accumulate points is rounded down to the next whole number.
2. Points are accrued from a maximum of 10 tournaments held in separate tournament weeks.
3. Points are accrued based on the club's best finish.

   Example: in the case where multiple events exist in a tournament week, regional points are still awarded based on in-region placement within each tournament. When regional points are not awarded due to a club's prior win in the same week, the points will not be awarded to teams finishing lower in the tournament. For example, if a club finishes first on each day, then the fastest time will be used for that club's regional points but no first place points will be awarded on the second day as the winner has blocked out the win from other clubs.

(viii)**In the case of a point tie**:

1. Fastest times from each club's four (4) best in region tournament placements will be averaged.

   Example: a club places second in a tournament, but has four other in region tournament wins, the times from the tournament wins will be used in the average, regardless of how fast a time was run to achieve the second-place result.

   a. Only times recorded at events timed entirely under NAFA board approved EJS will be used in this calculation.
   b. Only times recorded at events which qualify for regional points will be used in this calculation.
   c. When fewer than four (4) times are available for every club, the average will be calculated based on the maximum number of times available for every club based on the above criteria.

2. The club with the lowest average time will be named the regional champion.
3. If a tie still exists after the tiebreaker is exhausted, Co-Champions will be named.

Section 8.5 – NAFA® Champions

(a)NAFA® Champions will be named from the regional champions. NAFA will name Regular and Multibreed Champions:

(i)A minimum of six (6) tournaments must be entered, regardless of their location, to qualify for the NAFA Championship.

(ii)Of all tournaments entered in the NAFA fiscal year, the six (6) fastest times from the club's best team placements will be averaged.

1. Only times recorded using a NAFA Board approved EJS will be used in this calculation.
2. Only times from tournaments that qualify for regional points will be included in this calculation.

(iii)The club with the lowest average time will be named NAFA Champions

(iv)If a tie exists, Co-Champions will be named.

Section 8.6 – Clyde Moore Memorial Hall of Fame

(a)NAFA® may induct two dogs per year into the Hall of Fame. Using the following criteria, individuals are asked to nominate candidates that they consider deserving of this award. Each nominee may only be nominated by one person in each election.

(i)Longevity: A dog must have raced in NAFA sanctioned events for a minimum of four (4) years;

(ii)A nominee must not have earned NAFA points within 18 months of the close of the nominating period;

(iii)Notoriety: How well known is this dog? Nominees should be easily recognizable within their own racing area;

(iv)Team value: What is the worth of this dog to its team, i.e. untiring start dog, height dog, most consistent dog, fast anchor dog. Although other titles and achievements may be included in the nomination, each dog will be judged on the above flyball criteria only;

(v)Also, in order to be inducted into the Hall of Fame a dog must have 35% or more of the ballots returned and validly voted in that race.

(b)Submit a brief resume of two hundred (200) words or less to include the dog's name, CRN, breed, clubs raced with, and the reasons he or she deserves consideration.

(c)Each year all candidates will be judged by NAFA's Board of Directors in order of merit. A list of no more than five (5) finalists will be selected and put to a delegate vote.

(d)Nominations should be submitted via the NAFA webpage. Submit nominations to NAFA® no earlier than August 1st and no later than September 30th of each year. NAFA encourages anyone who feels that they have a dog worthy of recognition to keep photographs.

Section 8.7 – Regional MVP Award

(a)This award is given to the dog deemed to be most valuable in its specific region for the current racing year. To be eligible, the dog must have earned NAFA® points in that region during the current given racing year. Only one candidate will be given this award per year, per region. Each nominee may only be nominated by one person in each election.

(b)Nominations must come from a club in the candidate's region. Nominations shall be no more than 200 words, citing the contribution and outstanding qualities that make the candidate deserving of the award. Candidates cannot have previously won the award. Nominations should be submitted via the NAFA webpage. Submit nominations to NAFA no earlier than August 1st and no later than September 30th of each year.

(c)A committee shall be appointed by the Board of Directors and chaired by a member of the board. This committee will review the nominations and ensure they meet the above nomination criteria. All qualified nominations will be put to ballot vote.

(d)In conjunction with annual delegate voting, voting sheets will go out to delegates with only those candidates in their region. Delegates may vote for only one candidate. All votes must be returned in conjunction with deadlines set forth in the Hall of Fame voting.

(e)The winning candidate will be that candidate that earns the most returned votes from its region. Winners will be announced at the Annual General Meeting.

Section 8.8 – Judge of the Year Award

(a)This award is to recognize a NAFA® judge who shows dedication, knowledge, sportsmanship, and outstanding contribution to the sport. The award may be given to one judge in each racing year. To be eligible, the judge must be a current NAFA® judge at the approved level or higher. The judge must be in good standing with NAFA® and must have at least five years (60 months) of experience at the approved level or higher at the end of the nomination period.

(b)A nomination may be made by any person in good standing with NAFA®. Each nominee may only be nominated by one person in each election. The Board of Directors will narrow the list of nominees to no more than five (5) finalists to submit to a delegate vote.

(c)Nominations shall be no more than 200 words, citing the contribution and outstanding qualities that make the candidate deserving of the award. Candidates cannot have previously won the award in the past five years. Nominations should be submitted via the NAFA® webpage. Submit nominations to NAFA® no earlier than August 1st and no later than September 30th of each year.

(d)A committee shall be appointed by the Board of Directors and chaired by a member of the board. This committee will review the nominations and ensure they meet the above nomination criteria.

(e)The winning candidate will be the candidate who earns the most returned votes. Winners will be announced at the Annual General Meeting.

Section 8.9 – Regional Overall Club (ROC) Champions

Regional Overall Club (ROC) Champions are determined by averaging divisional placements for a club's regular team(s) at in-region events during the racing year, weighted

by in-region tournament attendance.

(a)At the end of each racing year, NAFA® will name Regional Club Overall Champions for each region and commemorate this achievement by awarding a plaque. Second and third place clubs will be recognized by awarding a certificate.

(b)**Good standing**. A club that is not in good standing at any time during the racing year is not eligible for placement in the Regional Overall Club Champion competition.

(c)**Disbanded club**. If a club disbands before the end of a racing year, it is not eligible to win a regional club overall championship.

(d)**In-region teams**. Similar to Regional Championships (see Section 8.4 – Regional Champions) (CP&P), all placements used for Regional Overall Club Championships must be earned in the club's home region, i.e. "in-region" teams.

(e)**Regular class eligibility**. Similar to Regional Championships (see Section 8.4 – Regional Champions) (CP&P), Regular classes must meet all of the following criteria to qualify for a club's placement(s) to count towards Regional Overall Club Championships:

(i)Have a minimum of four teams competing.
(ii)Include all clubs at the conclusion of the automated draw;
(iii)Regular classes limited to fewer than 20 teams shall include all teams at the conclusion of the limited draw.

(f)**Calculating the Regional Overall Club Champion (ROCC) Placements**:

ROCC Score = Average Placement x Regional Tournament Attendance Factor (RTAF)

(i)**Average Placement**. The average of the top 80% (rounded down to the next whole number) of divisional placements.
(ii)**RTAF**. 80% of tournaments qualifying for ROCC (rounded down to the nearest whole number) divided by the number of tournaments in which the club competed in the Regular Class. The minimum RTAF value is one.
(iii)**Clubs are ranked by ROCC Score** (low to high).

For example, Region X has a total of 10 tournaments in a racing year:

Club	Tournies Attended	Placements		Div.	Event	Avg of Placements (top 80%)	RTAF	ROCC Score	ROCC Placement
A	8	1.	1st	Div. 4	#1	1.50 (top 10)	1.00	1.50	1st
		2.	1st	Div. 4	#2				
		3.	1st	Div. 4	#3				
		4.	1st	Div. 4	#8				
		5.	1st	Div. 4	#4				
		6.	2nd	Div. 3	#4				
		7.	2nd	Div. 4	#5				
		8.	2nd	Div. 4	#6				

		9.	2nd	Div. 2	#7				
		10.	2nd	Div. 2	#8				
		11.	4th	Div. 1	#1				
		12.	4th	Div. 1	#3				
		13.	5th	Div. 1	#3				
B	5	1.	1st	Div. 2	#1	1.50 (top 4)	1.60	2.40	2nd
		2.	1st	Div. 2	#2				
		3.	2nd	Div. 2	#8				
		4.	2nd	Div. 2	#9				
		5.	2nd	Div. 2	#10				
C	2	1.	1st	Div. 1	#9	1.00 (top 1)	4.00	4.00	3rd
		2.	2nd	Div. 1	#10				

CHAPTER 9 – Conflict of Interest Policy

No NAFA® Executive Director, member of the Board of Directors or Regional Director may have a significant interest in any other flyball event-giving organization deemed by the NAFA Board to be in competition with the North American Flyball Association®. “Significant Interest” is defined as: ownership of, a directorship in, holding office in, employment by, under contract to, listed as a tournament director, Tournament Secretary or as head judge for an event sanctioned by, such a competing organization.

Section 9.1 – Board of Directors

Compliance with the NAFA® Conflict of Interest Policy shall be one of the eligibility requirements for service on the NAFA Board, as set out in Article IV, Section 3 of the By-Laws; violation of this Policy by a Board Member shall constitute grounds for removal from the Board pursuant to Article IV, section 17 of the By-Laws.

Section 9.2 – Regional Directors

Compliance with the NAFA® Conflict of Interest Policy shall be one of the eligibility requirements for service as a NAFA® Regional Director, as set out in Section 1.6 – Regional Directors (CP&P). Violation of this Policy by a Regional Director shall constitute grounds for removal from this position pursuant to Section 5.6 - Probation (CP&P).

Section 9.3 – Representing NAFA®

When representing NAFA® in any capacity, one has the responsibility to:

(a)Act with utmost integrity and not allow their judgement in making decisions to be influenced by personal loyalties or for personal gain. An example of a situation where this is important would be where a NAFA representative is faced with rendering a decision in a matter involving or affecting a family member, a club member, a personal friend or a dog belonging to one of these.

(b)Recognize that it is equally important to not only be objective and impartial, in fact, but also to avoid any appearance of acting to the advantage of individuals/dogs to which one has a personal connection.

(c)Where the stakes are high, recognize situations where one has a perceived or real conflict of interest in a duty one is to perform, and take reasonable steps to eliminate such conflicts. For example, where feasible, enlist another equally qualified individual to perform the duty.

NORTH AMERICAN FLYBALL ASSOCIATION, INC.®

BYLAWS

These Bylaws govern the affairs of the North American Flyball Association®, a nonprofit corporation organized under the Michigan Nonprofit Corporation Act (the "Act").

ARTICLE I - OFFICES

The principal office of the Corporation shall be located at 1288 N Summit Ave, Ste 107-195 Oconomowoc, WI 53066-4466, or such other place as the Board of Directors may determine. The Corporation may have such other offices, either within the State of Illinois or elsewhere, as the Board of Directors may determine or the business of the Corporation may require. The Board of Directors may change the location of any office of the Corporation.

ARTICLE II - PURPOSE

The purpose for which NAFA® was formed is to promulgate rules for amateur Flyball competition, to train and approve judges, to sanction amateur Flyball tournaments, to promote interest in the sport of Flyball, to encourage national and international amateur Flyball competition and to recognize excellence. The Corporation is a nonprofit, qualified amateur sports organization.

ARTICLE III - MEMBERSHIP

The Corporation will have no members.

ARTICLE IV - BOARD OF DIRECTORS

Section 1. Powers. The business of the Corporation shall be managed by and under the direction of the Board of Directors, which may exercise all powers of the Corporation and do all such lawful acts and things not prohibited by statute or by the Articles of Incorporation or these Bylaws. In addition to the authority conferred by other provisions of the Bylaws, the Board of Directors may promulgate such rules, regulations and orders as they deem appropriate to carry out the provisions of the Bylaws or any other laws applicable to the activities of the Corporation.

Section 2. Number. The number of voting members of the Board of Directors shall consist of no fewer than nine (9) nor more than fifteen (15), unless pursuant to the Act and in accordance with these Bylaws such number is increased or decreased by amendment to these Bylaws. In no event, however, shall the number of Directors be less than three (3) and no decrease in the number of Directors shall have the effect of shortening the term of any incumbent Director.

Section 3. Eligibility. Directors shall meet the following eligibility requirements: (i) be an individual who subscribes to the purposes and goals of the Corporation, (ii) receive no compensation or honoraria from the Corporation for their Board duties except reimbursement for reasonable expenses as set forth in Corporate Policies and Procedures, (iii) not be related to nor living with another Director, (iv) be in compliance with the NAFA® Conflict of Interest Policy stated in Chapter 9 of the Corporate Policies and Procedures, (v) be an individual who has not immediately prior to his election served two full consecutive terms on the Board of Directors as provided in Sections 5 and 6 of this Article II; and (vi) shall be in good standing with the Corporation. Good standing shall be defined as current in all financial obligations to the Corporation and not currently under any disciplinary action (probation, suspension, etc.).

Section 4. Election of Directors. Except as expressly provided otherwise in these Bylaws, Directors and the Executive Director shall be elected for three-year terms by delegate vote under Article VII. Nominations for vacant or vacating positions must be received by the Nominating Committee no later than 11:59 PM Central Daylight Time on September 30th. The Nominating Committee shall distribute a slate of qualified candidates for Directors and, when applicable, for the Executive Director at least sixty (60) days prior to the Annual General

Meeting. The slate of nominated candidates shall appear on the NAFA® web page or shall be mailed to the delegate vote holders separately. Delegate vote holders shall be entitled, but not required, to cast as many votes for Directors as there are positions to be filled times the number of delegate votes held, but may cast no more than the number of delegate votes held for any single candidate. The candidate(s) for each office receiving the most eligible votes shall be deemed elected. Ballots will be counted at or before the Annual General Meeting by the Election Committee, or by an independent individual or organization retained by the Board of Directors to tabulate the ballots. If there is a tie in the vote for the position of Executive Director or in the vote for the last position on the Board of Directors to be filled, there shall be a runoff election between the tied candidates.

Section 5. Term of Office. Unless elected to fill a vacancy, each Director shall be elected to a three (3) year term. Terms of office shall be staggered so that approximately one third (1/3) of the board members' terms will expire each year. No member of the Board of Directors may serve for more than two (2) full consecutive terms of office. Newly elected Directors shall commence their term of office at the conclusion of the Board meeting in which they are elected or confirmed, and terms will expire at the end of the meeting of the Board of Directors in the third year of the term at which the election of their successors is confirmed.

Section 6. Vacancies. Vacancies occurring as a result of the resignation, death, or removal of a Director, or the expansion of the size of the Board, may be filled by nomination by the Chairperson followed by election by the Board. Any Director chosen to fill a vacancy in mid-term shall serve the remaining term of office for the directorship so filled. Any Director who fills a vacated position and serves for two years or greater, shall be considered to have served a full term for purposes of election eligibility.

Section 7. Annual Meeting. The annual meeting of the Board of Directors shall be held within the period between December first and January thirty-first inclusive at such time and place as shall be determined by the Board of Directors. At the annual meeting, the Board of Directors shall elect officers (other than the Executive Director) and conduct such other business as shall come before the meeting.

Section 8. Regular Meetings. The Chairperson of the Board may designate a time and specific location for regular meetings of the Board of Directors. The Chairperson shall preside over all Regular Meetings of the Board of Directors.

Section 9. Special Meetings. Special meetings of the Board of Directors may be called by the Chairperson of the Board, any two (2) officers, or any three (3) Directors. Such meeting shall be held on such date and at such time and place and for such purposes as shall be designated in the notice of the meeting by the person or persons calling the meeting. At a special meeting, the Board of Directors shall conduct only the business specified in the notice of the meeting.

Section 10. Open Meetings. Subject to Section 13 of this Article IV, meetings of the Board of Directors shall be open.

Section 11. Notice: Waiver of Notice. Written notice of the time and place of all regular, special, and annual meetings of the Board of Directors and of the purposes of special meetings shall be given to each Director at least five (5) days before the date of the meeting, either personally or by sending such notice by mail or electronic transmission to each Director at the address designated by the Director for such purposes, or if none is designated, at the Director's last known address. Notice of any meeting of the Board of Directors may be waived in writing before or after the meeting. Attendance at a meeting constitutes waiver of notice of the meeting.

Section 12. Quorum and Vote at Meetings. At any meeting of the Board of Directors, a majority of the Directors in office shall be necessary to constitute a quorum for the transaction of business. A majority of the votes cast at a meeting of the Board of Directors, duly called and at which a quorum is present, shall be sufficient to take and authorize action upon any matter which may properly come before the meeting, unless the concurrence of a greater proportion is required for such action by statute, the Articles of Incorporation or these Bylaws. Notwithstanding the preceding, the Executive Director may, in their discretion, require the vote of at least three quarters (3/4) of the Directors in office to take or to authorize particular actions coming before the Board of Directors, except amendment of these Bylaws as provided in Article IX. The Executive Director

shall exercise the authority to require such a vote on any particular action at any meeting at which the Executive Director is present or by written notice given to the Chairperson by mail or electronic transmission at least three (3) days in advance of the meeting. If, at any meeting of the Board of Directors, there shall be less than a quorum present, a majority of those present may adjourn the meeting without further notice, until a quorum shall be present. Subsequently, at any adjourned meeting at which a quorum shall become present, any business may then be transacted at the meeting as originally notified. Directors may not vote by proxy.

Section 13. Executive Session. The Board of Directors may adjourn to executive session at any time it deems in its discretion necessary or appropriate for the benefit of the organization. At the direction of the Chairperson of the Board, or upon the request of any two (2) Directors, a matter shall be discussed in executive session. Executive session shall be restricted to members of the Board of Directors, the Executive Director and any other such persons invited by the Chairperson. Failure to maintain the confidentiality of any executive session of the Board of Directors constitutes cause for removal of a Director.

Section 14. Telephone Meetings. Members of the Board of Directors or any Committee designated by the Board may participate in a meeting of such Board or Committee by means of conference telephone or similar communications equipment by means of which all persons participating in the meeting can hear each other, with the advance approval of the Chairperson of the Board or Committee. Participation in a meeting pursuant to this Section shall constitute presence in person at such meetings and a waiver of notice of the meeting.

Section 15. Action by Unanimous Consent. Any action required or permitted to be taken at any meeting of the Board of Directors or of any Committee thereof may be taken without a meeting if a written consent, setting forth the action so taken, is approved in writing by all the members of the Board of Directors or the Committee, as the case may be, and such written consent shall have the same force and effect as a unanimous vote at a meeting of the Board of Directors or the Committee. A consent may be delivered by electronic transmission to the Secretary of the Corporation or to the Chairperson and shall be effective upon receipt. For approval of the minutes, unanimous written consent may be obtained by written notice setting a date allowing at least 7 calendar days by which the action will be deemed approved if not objected to in writing.

Section 16. Resignation and Removal of Directors. Any Director may resign at any time. Such resignation shall be made in writing and shall take effect at the time specified therein or, if no time is specified, at the time of its receipt by the Chairperson or Secretary. Directors may be removed with or without cause at any meeting of the Board of Directors duly called and at which a quorum is present, by the affirmative vote of two-thirds of the Directors then in office. Absence from more than one-third (1/3) of the meetings of the Board of Directors in any year constitutes cause for the removal of a Director.

Section 17. Compensation and Reimbursement. No member of the Board of Directors shall receive compensation for their Board duties except reimbursement for reasonable expenses by the Board as set forth by Corporate Policies and Procedures.

Section 18. Minutes. The Board of Directors shall keep minutes of all meetings of the Board of Directors and the proceedings thereof. The Board of Directors shall take appropriate action to cause the approved minutes of such meetings to be delivered upon receipt of written request for such minutes to the Secretary.

Section 19. Conduct of Meetings. Meetings of the Board of Directors and of Committees will be run substantially in accordance with Robert's Rules of Order, but the failure to comply with Robert’s Rules of Order shall not invalidate any action otherwise duly taken. If the meeting is being tape recorded, speakers shall state their names before addressing the Chairperson. There shall be a policy of no smoking during all meetings.

ARTICLE V - COMMITTEES OF DIRECTORS

Section 1. Committees. In addition to the standing committees designated in this Article V (the "Standing Committees"), the Board of Directors may, by resolution, designate one (1) or more Committees of the Board which shall have such powers and duties as the Board of Directors may determine from time to time. Except as otherwise provided by statute, the Standing Committees shall have the powers and authority designated in this Article V and such additional powers and duties as the Board of Directors may determine from time to time. Each Standing Committee other than the Nominating Committee and each other Committee shall include at least one (1) Director. No Committee of the Board of Directors shall have the power to amend the Articles of Incorporation or the Bylaws of the Corporation. Non-directors may be appointed to the membership of Committees other than the Executive Committee and the Disciplinary Committee. The Chairperson of the Board shall appoint the Committees with approval of the Board of Directors and serve as a voting member of all Committees, except the Nominating Committee and, in a year in which the Chairperson is a candidate, the Elections Committee. The Executive Director shall be privileged to attend and to participate without a vote in the meetings of all Committees of which the Executive Director is not otherwise a member.

Section 2. Standing Committees. Each member of the Board of Directors shall serve in some capacity on a Standing Committee. The Standing Committees of the Board of Directors shall be as follows:

(a) Executive Committee. The Executive Committee shall consist of the Chairperson of the Board, Vice Chairperson, Secretary, and Treasurer. The Executive Committee shall have and may exercise any and all power and authority of the Board of Directors in the management of the business affairs of the Corporation (within the limits provided by law) when the Board is not in session, except over matters specifically retained by the Board by resolution or in these Bylaws.

(b) Finance Committee. The Finance Committee shall consist of the Vice Chairperson, the Treasurer and other appointees. The Vice Chairperson and Treasurer of the Corporation shall co-chair the Finance Committee. The Finance Committee shall have the power and authority to seek all possible funding sources for the Corporation; to review and recommend to the Board of Directors the engagement of the independent accounting firm; to review with independent accountants the fee, scope and timing of the services; to review with the independent accountants, upon completion of any annual review or audit, significant accounting adjustments, recommendations for improving internal controls and all other significant findings made during an audit or review; to meet periodically with the Corporation's management and accountants to discuss internal accounting and financial controls; to review and make recommendations on material contracts to which the Corporation is a party; to initiate and supervise any special investigation it deems necessary; to consult with the Corporation's management regarding, and to periodically review, the financial condition of the Corporation; and, if requested to do so by the Board of Directors, to work with the Executive Director and other Standing Committees to compile the annual budget of the Corporation for approval by the Board.

(c)Nominating Committee. The Nominating Committee shall not include members of the Board of Directors, candidates for office, or members of their households. The Chairperson of the Board shall appoint the Nominating Committee and its chairperson. The Nominating Committee shall have the power, authority and duty to notify the delegate vote holders of the ability to submit nominations, as appropriate, to fill Director positions; to provide a slate to fill vacating Director positions to the Board at least sixty (60) days prior to the Annual General Meeting; and to provide to the Board of Directors recommendations of names of people qualified to fill untimely vacancies on the Board of Directors. The Nominating Committee shall include in the slates of nominees to be presented for election to the Board of Directors and as Executive Director all individuals recommended by delegates that meet the eligibility requirements in Section 3 of Article IV.

(d) Rules Committee. The Rules Committee is charged with the upkeep, improvement and interpretation of the Bylaws, the Rules of Racing, and the Corporate Policies and Procedures. At least one Supervising Head Judge shall serve on the Rules Committee. All changes recommended by the Rules Committee to the Bylaws, the Rules of Racing, or the Corporate Policies and Procedures must be approved by the Board of Directors which may also, in its discretion, submit matters that affect the Rules of Racing or other matters as appropriate to delegate vote as provided in Section 5 of Article VII.

(e) Judges Committee. The Judges Committee shall develop and maintain a program for the training of judges

and other individuals seeking information about the sport. This Committee shall oversee the planning of NAFA® sponsored educational seminars and workshops for the purpose of advancing the sport in areas where information is needed. This Committee shall also oversee the development of new NAFA® approved judges and recommend their approval.

(f) Marketing Committee. The Marketing Committee is charged with responsibility for publicity, promotion, advertising, opportunity development, public relations and developing all promotional materials.

(g) Election Committee. The Election Committee shall consist of at least three (3) persons of which at least two (2) shall be persons in good standing, holding no office within the Corporation and only one (1) shall be a current Board member not up for election. Individuals who are current candidates for election or re-election to the Board of Directors or Executive Director shall not serve on the Election Committee. The Election Committee shall receive completed ballots at or before the beginning of the Annual General Meeting and shall be responsible for verifying that all returned ballots are authentic and tallying the results (or for assisting the independent individual or organization retained by the Board of Directors in doing so) and reporting the results to the presiding officer of the Annual General Meeting. The Election Committee may dispose of the ballots after it has reported the results of the election and the Annual General Meeting has been adjourned.

(h) Disciplinary Committee. The Disciplinary Committee shall consist of at least three (3) members and shall consist solely of Board members. The Committee will consider all charges brought forward to the Board, gather information and consult all parties in the dispute and investigate the charges. The Committee will make a formal recommendation to the Board on actions for this dispute as well as recommendations to the Executive Director regarding any immediate action required.

Section 3. Tenure. Subject to the provisions of Section 7 and 8 of this Article V, each member of any Standing Committee or any other Committee shall hold office until his successor is designated by the Board of Directors. The Chairperson of the Board shall appoint the chairpersons of each Committee, unless otherwise specified in these Bylaws.

Section 4. Meeting and Notices. Regular meetings of Committees of the Board of Directors may be held without notice at such times and places as such Committees may determine by resolution or by written notice from the Chairperson of the Board or the Chairperson of the Committee at least seven (7) days in advance of the meeting. Special meetings of Committees may be called by any member thereof upon not less than twenty-four (24) hours advance notice to each member of that Committee stating the place, date and hour of the meeting, which notice shall be given in the manner provided in Section 11 of Article IV hereof. Any member of a Committee may waive notice of any meeting thereof, either before or after the meeting, by signing a waiver of notice that shall be filed with the records of such meeting, or by attendance at such meetings.

Section 5. Quorum. A majority of the members of a Committee shall constitute a quorum for the transaction of business at any meeting thereof. The vote of a majority of the members of a Committee present at a meeting at which a quorum is present shall constitute action of the Committee.

Section 6. Action By Unanimous Consent and Telephone Meetings. Sections 14 and 15 of Article IV are hereby incorporated by reference into this Article V, and their provisions shall apply to all Committees and members of the Committees to the same extent that they apply to the Board of Directors and all Directors.

Section 7. Removal and Resignations. Any member of any Committee may be removed at any time with or without cause by resolution adopted by a majority of the Directors then in office. Any member of a Committee may resign from the Committee at any time by giving written notice to the Chairperson of the Board of Directors or the Secretary of the Corporation. Unless otherwise specified therein, such resignation shall take effect upon receipt thereof.

Section 8. Vacancies. Any vacancy occurring on any of the Committees of the Directors shall be filled by appointment of the Chairperson of the Board and ratified by the Board of Directors.

Section 9. Reports. The Chairperson of each Standing Committee or other Committee established by the Board of Directors shall report any actions taken or recommendations by the Committee to the Board of

Directors at the next regular or annual meeting thereof held after the Committee action or meeting. The Secretary of the Corporation shall record the reports by Committee chairpersons in the Corporation's minutes.

ARTICLE VI - OFFICERS

Section 1. Positions. The officers of the Corporation shall be the Chairperson of the Board, the Executive Director, the Vice-Chairperson, the Secretary and the Treasurer, who shall exercise such powers and perform such duties as shall be determined in accordance with these Bylaws or by the Board. No person shall hold more than one office of the Corporation. The Chairperson, Vice-Chairperson, Secretary and Treasurer shall be elected by the Board of Directors from among its members. Newly elected officers (other than the Executive Director) shall commence their term of office at the conclusion of the Board meeting in which they are elected. The Executive Director shall be elected by delegate vote as provided in Section 4 of Article IV.

Section 2. Election, Term of Office and Vacancies. Each officer of the Corporation other than the Executive Director shall be elected annually by vote of a majority of the members of the Board of Directors then in office and shall serve for one (1) year or until the Executive Director's successor shall have been duly elected and qualified, or until the Executive Director's death, resignation or removal from office in accordance with these Bylaws. The Executive Director shall serve for a three (3) year term. Vacancies in the positions of officers may be filled by vote of a majority of the members of the Board of Directors then in office. Officers elected to fill vacancies shall serve the remainder of the terms of their predecessor, except that the Board of Directors may provide for the election of an Executive Director by the delegates in conjunction with a Board election held prior to the expiration of term of the former Executive Director. An Executive Director selected in such an election shall serve for a three (3) year term (and not for remaining portion of the term that became vacant).

Section 3. Chairperson of the Board. The Chairperson of the Board shall preside at and set the agenda for meetings of the Board of Directors, shall act as the chief executive officer of the Corporation, shall appoint Committee Chairpersons and members and Special Project Leaders as needed, and shall exercise and perform such other powers and duties as may be assigned by the Board of Directors or by the Bylaws. The Chairperson shall carry into effect all orders and resolutions of the Board subject to the right of the Board by resolution to delegate any specific powers to any other officer, Director or agent of the Corporation and, to the extent required by applicable law, shall be considered to be the President of the Corporation. The Chairperson shall, on behalf of the Corporation, as authorized by the Board, execute all deeds, notes, bonds, mortgages, contracts and other instruments in writing.

Section 4. Executive Director. The Executive Director shall report to the Board of Directors. The Executive Director shall be the chief operating officer of the Corporation, and shall, subject to the direction of the Board of Directors, generally supervise, direct and control the business of the Corporation and shall have the responsibility for the day-to-day management of the business and affairs of the Corporation. The Executive Director shall attend meetings of the Board of Directors and shall make periodic reports to the Board of Directors and, as provided in Section 12 of Article IV, may require a vote of three-quarters (3/4) of the Directors for actions of the Board of Directors. The Executive Director shall appoint Regional Directors and other staff as necessary for the day-to-day operation of the Corporation. The Executive Director shall preside over the Annual General Meeting.

The Executive Director shall implement decisions of the Board of Directors and shall act, subject to the Board's authority and guidance, to enforce NAFA® policy, Rules of Racing and Corporate Policies and Procedures. The Executive Director may, subject to the Board's approval, delegate portions of these responsibilities to qualified individuals within NAFA®. The Executive Director may, from time to time, require special projects to be led or staffed. At the Executive Director's request, the Chairperson will appoint Special Project Leaders, teams and/or Committee members.

The Executive Director has the power to suspend or place on probation individuals or Clubs from all NAFA benefits and privileges for infraction of NAFA® Rules of Racing or Corporate Policies and Procedures subject to ratification by the Board of Directors at its next regular or annual meeting. This power is non-delegable.

Section 5. Vice-Chairperson. The Vice-Chairperson shall preside over meetings in the absence of the

Chairperson and shall have such duties as may be given by the Board of Directors from time to time. The Vice Chairperson shall serve as the Co-chairperson of the Finance Committee.

Section 6. Secretary. The Secretary or, in the event of the Secretary's inability or refusal to act, a duly appointed Assistant Secretary shall attend all meetings of the Board of Directors, and shall record, or cause to be recorded, all the proceedings of the meetings of the Board of Directors in a book to be kept for that purpose, and shall archive reports or minutes provided by Committees. The Secretary shall give, or cause to be given, notice of all meetings of the Board of Directors, and shall perform such other duties as may be prescribed by the Board of Directors or the Executive Director. The Secretary shall maintain a current list of the Board of Directors detailing when each Director's term expires. The Secretary shall have custody of the corporate seal of the Corporation, and the Secretary, or an Assistant Secretary, shall have authority to affix the same to any instrument requiring it, and when so affixed it may be attested by the signature of the Secretary or by the signature of the Assistant Secretary. The Board of Directors may give general authority to any other officer to affix the seal of the Corporation and to attest the affixing by such officer's signature. The Secretary or an Assistant Secretary may also attest all instruments signed by the officers of the Corporation.

Section 7. Treasurer. Subject to the direction of the Board of Directors, the Treasurer shall have general oversight responsibility for the financial affairs of the Corporation. The Treasurer shall serve on the Finance Committee as its Co-chairperson, have custody of the corporate funds and securities of the Corporation, and shall keep a full and accurate accounting of the receipts and disbursements and books belonging to the Corporation. The Treasurer shall deposit all monies and all other valuable assets delivered to them to the credit of the Corporation in such depositories as may be designated by the Board of Directors or the Finance Committee. The Treasurer shall see that appropriate signatory cards are executed and maintained as current and shall bring all papers needed to accomplish this to the annual meeting of the Board of Directors. The Treasurer shall render to the Board of Directors at the Board's regular meetings, or when the Board of Directors so requires, but not less than quarterly, an account of the financial condition of the Corporation, to include but not be limited to income statements, comparative income statements, balance sheets, accounts receivable, and accounts payable and shall call on and make available to the outside accounting firm retained by the Finance Committee as provided in Article V, Section 2(b) of these Bylaws such materials as may be requested by the Board, the Finance Committee or the outside accounting firm. The Treasurer shall perform such other duties and have such other powers as the Board of Directors may prescribe.

Section 8. Bond. The Corporation shall bond the Treasurer in such sum and with such surety as shall be satisfactory to the Board of Directors for the faithful performance of the duties of the Treasurer. If required by the Board of Directors, any other officer shall give the Corporation a bond in such sum and with such surety or sureties as shall be satisfactory to the Board of Directors for the faithful performance of the duties of that office and for the restoration to the Corporation, in case of their death, resignation, retirement or removal from office, of all books, papers, vouchers, money and other property of whatever kind, in their possession or under their control and belonging to the Corporation. Payment of the bond shall be by the Corporation.

Section 9. Authority for Expenditures. The Treasurer, the Executive Director, and the Chairpersons of the Board and the Finance Committee shall each have the authority, pursuant to his signature to approve and direct expenditures in accordance with the direction of the Board on behalf of and in the best interest of the Corporation. For expenditures in excess of $5,000 the written approval of at least two of the above-named officers shall be required.

Section 10. Indemnification. The Corporation shall, to the greatest extent permitted from time to time by the laws of the State of Michigan, indemnify any person made, or threatened to be made, a party to an action, suit or proceeding (whether civil, criminal, administrative or investigative), whether such is an action by or in the right of the Corporation or otherwise, by reason of the fact that such person is or was a Director, officer, or member of a Committee of the Corporation or, while serving as a Director, officer or member of a Committee of the Corporation, serves or served any other enterprise at the request of the Corporation (all of such persons being sometimes referred to in this Article VI as a "Corporate Functionary"), against all expenses (including attorneys' fees), judgments, fines and amounts paid in settlement actually and reasonably incurred by such person in connection with such action, suit or proceeding. The Corporation may also, to the extent authorized from time to time by the Board of Directors, grant rights to indemnification to employees or agents of the Corporation and others to the fullest extent provided under the laws of the State of Michigan as they may be

in effect from time to time.

Any indemnification under this Section shall be made by the Corporation only as authorized in the specific case upon a determination that indemnification of the Corporate Functionary or other person is proper in the circumstances because he has met the applicable standard of conduct. Such determination shall be made as provided by applicable law.

The rights of indemnification provided for in this Section shall be in addition to all rights to which any Corporate Functionary may be entitled under any agreement or as a matter of law or otherwise and shall inure to the benefit of the Corporate Functionary's estate, heirs, executors and administrators. If this Section or any portion hereof shall be invalidated on any ground by a court of competent jurisdiction, the Corporation shall nevertheless indemnify each Corporate Functionary to the full extent permitted by any applicable portion of this Section that shall not have been invalidated.

The Corporation may purchase and maintain insurance on behalf of any Corporate Functionary against any liability asserted against them and incurred by them in any such capacity or arising out of his status as such, whether or not the Corporation would have the power to indemnify them against such liability under the provisions of this Section.

ARTICLE VII - AFFILIATE CLUBS AND DELEGATES

Section 1. Local Organizations. There shall be local organizations which shall consist of Affiliate Clubs abiding by the policies and procedures of the Corporation approved by the Board of Directors. Affiliate Clubs must register with the Corporation and pay such fee as shall be established by the Board of Directors from time to time. An Affiliate Club may field any number of teams it desires. Such teams are not required to be individually registered with NAFA®. Each Affiliate Club must register with NAFA® a single individual or corporation (the “Club Owner”) as the sole authority to correspond with NAFA® on their behalf. The Corporation shall recognize changes in the identity of the Club Owner representing a particular Affiliate Club only if it receives a written direction from the former Club Owner or a court order.

Section 2. Delegate Vote Calculations. Delegate votes are calculated based on the activities of the Affiliate Club or service by an individual during the preceding Racing Year. At the end of the Racing Year, NAFA® will notify the Club Owner of each Affiliate Club and each individual who provided service of the number of delegate votes earned that year. Delegate votes are determined as follows:

(a)Affiliate Club Delegate Votes. An Affiliate Club must compete in at least one (1) event during the preceding Racing Year to qualify for delegate votes. An Affiliate Club earns delegate votes by competing in tournaments according to the follow schedule:

Entries	Votes		Entries	Votes		Entries	Votes
4 – 5	1		30 - 35	6		60 - 65	11
6 – 11	2		36 - 41	7		66 - 71	12
12 – 17	3		42 - 47	8		72 - 77	13
18 – 23	4		48 - 53	9		78 - 83	14
24 – 29	5		54 - 59	10		>83	15

Team entries are the greatest number of entries on a given day during a tournament week. Additionally, one (1) delegate vote per Affiliate Club will be earned for hosting each tournament day. No Affiliate Club shall earn more than fifteen (15) delegate votes in total by team entries or tournament hosting.

(b)Service Votes. An individual serving in their position as a NAFA® Board member, Regional Director, or an approved or supervising judge as of September 30 shall receive one (1) delegate vote for the upcoming election for each form of service rendered, up to a total of three (3) delegate votes, over and above any delegate votes otherwise earned.

(c)Distribution of Delegate Votes. The Board of Directors may, from time to time, adopt and modify rules or guidelines to provide for individual delegate votes awarded to Affiliate Clubs to be issued directly to the delegates named by the Club Owner but, absent such rule or provision, NAFA® shall distribute all delegate

votes awarded to an Affiliate Club to the Club Owner. When multiple votes are awarded to a Club Owner or single individual, they may be voted separately or as a block.

Section 3. Rules Governing Delegate Voting. Delegate voting for Directors and the Executive Director and on matters submitted to delegate vote by the Board of Directors shall be conducted by mail or by electronic transmission pursuant to policies and procedures approved from time to time by the Board of Directors. Such policies and procedures shall provide for notice to Club Owners of Affiliate Clubs and individuals of the number of delegate votes earned; and for validating and counting ballots either by the Election Committee or through such outside service as the Board may, in its discretion, retain for such purposes.

Section 4. Annual General Meeting. NAFA's Annual General Meeting shall be held within the period between December 1st and January 31st inclusive at such time and place as determined by the Board of Directors. Written notice of the Annual General Meeting shall be given by mail or electronic transmission to delegate vote holders and Directors of the Corporation at least thirty (30) days in advance of the meeting. The Executive Director shall preside at the Annual General Meeting. In the absence of the Executive Director, the Chairperson shall preside. At the Annual General Meeting, the results of the Board of Directors election and, when applicable, the results of the election for Executive Director, shall be announced.

Section 5. Delegate Action. The following shall be determined by delegate vote:

(a) The election of the members of the Board of Directors and Executive Director, as provided in Article IV, section 4 of these Bylaws;
(b) The election of dogs to the Hall of Fame or Regional MVP or such other recognition as may be provided for from time to time for dogs or individuals within NAFA®;
(c) Such proposed changes in the Rules of Racing, awards and other forms of recognition for performance in NAFA® racing events or service to the Corporation, and other matters affecting the conduct of events for approval as the Board may, in its discretion, choose to submit to either a binding or non-binding delegate vote. Binding approval by delegate vote of changes in the Rules of Racing shall require the affirmative vote of two-thirds (2/3) of the valid votes cast. The Board of Directors may, however, in its discretion approve changes in the Rules of Racing that have been approved by a majority, but less than two-thirds (2/3), of the valid delegate votes cast. A proposed change in the Rules of Racing that has been presented for a binding delegate vote and has not been approved by the delegates shall not be presented to the delegates again for at least three (3) years unless the Executive Director approves in writing.

ARTICLE VIII - GENERAL PROVISIONS

Section 1. Seal. The Board of Directors shall adopt a seal for the Corporation.

Section 2. Fiscal Year. The fiscal year of the Corporation shall commence on October 1 and end on September 30 of each year.

Section 3. Legal Construction. If any Bylaw provision is held to be invalid, illegal or unenforceable in any respect, the invalidity, illegality or unenforceability shall not affect any other provision and the Bylaws shall be construed as if the invalid, illegal or unenforceable provision had not been included in the Bylaws.

ARTICLE IX - AMENDMENTS TO BYLAWS

These Bylaws may be altered, changed, added to, or amended at any regular or special meeting of the Board of Directors. Said alterations, changes, additions or amendments shall be passed upon by the vote of a majority of the members of the Board of Directors then in office.

The foregoing constitutes the Bylaws of the Corporation presented to and duly adopted by the Board of Directors on the __ day of _____, 20__.

Secretary, North American Flyball Association, Inc.

NORTH AMERICAN FLYBALL ASSOCIATION, INC.®

APPENDIX A

Schedule of Fees

North American Flyball Association, Inc.
1288 N Summit Ave, Ste 107-195
Oconomowoc, WI 53066-4466

For fees stated only in USD, payments in Canadian funds will be computed using the current exchange rates from TD Canada Trust to purchase US dollars

Competition Racing Numbers (CRN) - $40 USD.

New NAFA® Club Registration - $40 USD.

Replacement Award Pins (due to loss) $7 USD (excluding Hobbes Pins).

Hobbes Pins – current market value (contact executive director)

Aggression Excusal Appeal $100 USD.

Recording Fees (payable by the host club):

- When tournaments are scored electronically and results and funds are received by NAFA within 14 days of the end of the tournaments:
    - $25 USD per team that competes in a single day NAFA sanctioned tournament; or $38 USD per team for tournaments lasting more than 1 day.
    - When multiple tournaments hosted by the same club occur on successive days and each is scored electronically, the full fee per team is due for the tournament with the largest entry and $12 USD per team may be deducted from each additional tournament.
- Clubs submitting their fees in Canadian funds must report the exchange rate used on the NAFA Form C.6 from TD Canada Trust for purchasing US dollars.

Late Schedule & Seeding Fee - $50 USD when a host club fails to provide a preliminary schedule, tournament format and seeding to the regional director 10 days in advance of an event (payable by the host club).

NAFA® tournament results and fees that arrive to NAFA® after 14 days have the following penalties;

- 15 plus days after an event, a fee of $50 USD will be charged.
- One calendar month after an event, an additional $50 USD late fee will be charged for a total of $100 USD.
- Disciplinary action will be taken for results received any later than two calendar months after an event.

Refer charges for conduct prejudicial to the sport of flyball - $100 USD (refundable if charges are sustained).

Checks returned for Non-Sufficient Funds - $50 USD. If a check received for a CRN is returned NSF, the team will not receive points because the dog does not have a valid CRN.

Failure to ship out NAFA® EJS:

Failure to ship out NAFA® EJS the next available day after the tournament - $100 USD.

Failure to ship out NAFA® EJS the next day after the tournament and failure to do so affects the next tournament - $250 USD.

NORTH AMERICAN FLYBALL ASSOCIATION, INC.®

APPENDIX B

Racing Schedules

3 TEAM ROUND ROBIN

RACE 1	3	vs	1
RACE 2	2	vs	3
RACE 3	1	vs	2

ALLOW 30 MINUTES FOR RACES

4 TEAM ROUND ROBIN

RACE 1	4	vs	1
RACE 2	2	vs	3
RACE 3	1	vs	3
RACE 4	4	vs	2
RACE 5	3	vs	4
RACE 6	1	vs	2

ALLOW 1 HOUR FOR RACES

5 TEAM ROUND ROBIN

RACE 1	5	vs	2
RACE 2	4	vs	1
RACE 3	3	vs	5
RACE 4	2	vs	4
RACE 5	1	vs	3
RACE 6	4	vs	5
RACE 7	2	vs	3
RACE 8	5	vs	1
RACE 9	3	vs	4
RACE 10	1	vs	2

ALLOW 1 HOUR & 20 MINUTES FOR RACES

6 TEAM ROUND ROBIN

RACE 1	2	vs	3
RACE 2	6	vs	1
RACE 3	4	vs	5
RACE 4	3	vs	6
RACE 5	4	vs	2
RACE 6	5	vs	1
RACE 7	2	vs	6
RACE 8	1	vs	4
RACE 9	5	vs	3
RACE 10	6	vs	4
RACE 11	2	vs	5
RACE 12	3	vs	1
RACE 13	5	vs	6
RACE 14	4	vs	3
RACE 15	1	vs	2

ALLOW 2 HOURS & 10 MINUTES FOR RACES

As per Section 6.3 – Format & Schedule: Lane assignments should be reversed for each subsequent round robin.

7 TEAM ROUND ROBIN

RACE 1	1	vs	4
RACE 2	2	vs	5
RACE 3	3	vs	6
RACE 4	4	vs	7
RACE 5	5	vs	1
RACE 6	6	vs	2
RACE 7	7	vs	3
RACE 8	1	vs	3
RACE 9	5	vs	7
RACE 10	2	vs	4
RACE 11	6	vs	1
RACE 12	3	vs	5
RACE 13	7	vs	2
RACE 14	4	vs	6
RACE 15	7	vs	1
RACE 16	2	vs	3
RACE 17	4	vs	5
RACE 18	6	vs	7
RACE 19	3	vs	4
RACE 20	5	vs	6
RACE 21	1	vs	2

ALLOW 3 HOURS FOR RACES

8 TEAM ROUND ROBIN

RACE 1	4	vs	8
RACE 2	3	vs	7
RACE 3	2	vs	6
RACE 4	1	vs	5
RACE 5	6	vs	1
RACE 6	8	vs	3
RACE 7	2	vs	5
RACE 8	4	vs	7
RACE 9	3	vs	6
RACE 10	5	vs	8
RACE 11	7	vs	2
RACE 12	1	vs	4
RACE 13	8	vs	2
RACE 14	4	vs	6
RACE 15	7	vs	1
RACE 16	3	vs	5
RACE 17	6	vs	8
RACE 18	2	vs	4
RACE 19	5	vs	7
RACE 20	1	vs	3
RACE 21	8	vs	1
RACE 22	6	vs	7
RACE 23	4	vs	5
RACE 24	2	vs	3
RACE 25	7	vs	8
RACE 26	5	vs	6
RACE 27	3	vs	4
RACE 28	1	vs	2

ALLOW 4 HOURS FOR RACES

9 TEAM ROUND ROBIN

RACE 1	1	vs	9
RACE 2	7	vs	5
RACE 3	8	vs	4
RACE 4	6	vs	3
RACE 5	9	vs	7
RACE 6	2	vs	8
RACE 7	5	vs	3
RACE 8	1	vs	6
RACE 9	4	vs	2
RACE 10	9	vs	5
RACE 11	8	vs	6
RACE 12	1	vs	7
RACE 13	3	vs	2
RACE 14	5	vs	4
RACE 15	1	vs	8
RACE 16	7	vs	6
RACE 17	2	vs	9
RACE 18	4	vs	3
RACE 19	2	vs	7
RACE 20	5	vs	1
RACE 21	3	vs	9
RACE 22	6	vs	4
RACE 23	9	vs	8
RACE 24	7	vs	3
RACE 25	4	vs	1
RACE 26	6	vs	2
RACE 27	8	vs	5
RACE 28	9	vs	6
RACE 29	7	vs	4
RACE 30	5	vs	2
RACE 31	3	vs	1
RACE 32	4	vs	9
RACE 33	8	vs	7
RACE 34	6	vs	5
RACE 35	3	vs	8
RACE 36	2	vs	1

ALLOW 5 HOURS & 10 MINUTES FOR RACES

As per Section 6.3 – Format & Schedule:
Lane assignments should be reversed for each subsequent round robin.

DOUBLE ELIMINATION PLACEMENTS

3 TEAM DOUBLE ELIMINATION

1ST	Winner Race 5 (4)
2ND	Loser Race 5
3RD	Loser Race 3

4 TEAM DOUBLE ELIMINATION

1ST	Winner Race 7 (6)
2ND	Loser Race 7 (6)
3RD	Loser Race 5
4TH	Loser Race 4

5 TEAM DOUBLE ELIMINATION

1ST	Winner Race 9 (8)
2ND	Loser Race 9 (8)
3RD	Loser Race 7
4TH	Loser Race 6
5TH	Loser Race 4

6 TEAM DOUBLE ELIMINATION

1ST	Winner Race 11 (10)
2ND	Loser Race 11 (10)
3RD	Loser Race 9
4TH	Loser Race 8
5TH	Loser Race 6
6TH	Loser Race 5

7 TEAM DOUBLE ELIMINATION

1ST	Winner Race 12 (13)
2ND	Loser Race 12 (13)
3RD	Loser Race 11
4TH	Loser Race 10
5TH	Loser Race 7
6TH	Loser Race 8
7TH	Loser Race 6

8 TEAM DOUBLE ELIMINATION

1ST	Winner Race 15 (14)
2ND	Loser Race 15 (14)
3RD	Loser Race 13
4TH	Loser Race 12
5TH	Loser Race 10
6TH	Loser Race 9
7TH	Loser Race 5
8TH	Loser Race 6

9 TEAM DOUBLE ELIMINATION

1ST	Winner Race 17 (16)
2ND	Loser Race 17 (16)
3RD	Loser Race 15
4TH	Loser Race 14
5TH	Loser Race 12
6TH	Loser Race 11
7TH	Loser Race 7
8TH	Loser Race 8
9TH	Loser Race 6

10 TEAM DOUBLE ELIMINATION

1ST	Winer Race 19 (18)
2ND	Loser Race 19 (18)
3RD	Loser Race 17
4TH	Loser Race 16
5TH	Loser Race 14
6TH	Loser Race 13
7TH	Loser Race 9
8TH	Loser Race 10
9TH	Loser Race 8
10TH	Loser Race 7

11 TEAM DOUBLE ELIMINATION

1ST	Winner Race 21 (20)
2ND	Loser Race 21 (20)
3RD	Loser Race 19
4TH	Loser Race 18
5TH	Loser Race 15
6TH	Loser Race 16
7TH	Loser Race 12
8TH	Loser Race 11
9TH	Loser Race 10
10TH	Loser Race 9
11TH	Loser Race 8

12 TEAM DOUBLE ELIMINATION

1ST	Winner Race 23 (22)
2ND	Loser Race 23 (22)
3RD	Loser Race 21
4TH	Loser Race 20
5TH	Loser Race 18
6TH	Loser Race 17
7TH	Loser Race 16
8TH	Loser Race 15
9TH	Loser Race 11
10TH	Loser Race 9
11TH	Loser Race 10
12TH	Loser Race 12

DOUBLE ELIMINATION PLACEMENTS

13 TEAM DOUBLE ELIMINATION

1ST	Winner Race 25 (24)
2ND	Loser Race 25 (24)
3RD	Loser Race 23
4TH	Loser Race 22
5TH	Loser Race 20
6TH	Loser Race 19
7TH	Loser Race 17
8TH	Loser Race 18
9TH	Loser Race 14
10TH	Loser Race 13
11TH	Loser Race 12
12TH	Loser Race 11
13TH	Loser Race 10

14 TEAM DOUBLE ELIMINATION

1ST	Winner Race 27 (26)
2ND	Loser Race 27 (26)
3RD	Loser Race 25
4TH	Loser Race 24
5TH	Loser Race 22
6TH	Loser Race 21
7TH	Loser Race 19
8TH	Loser Race 20
9TH	Loser Race 15
10TH	Loser Race 16
11TH	Loser Race 14
12TH	Loser Race 13
13TH	Loser Race 12
14TH	Loser Race 11

15 TEAM DOUBLE ELIMINATION

1ST	Winner Race 29 (28)
2ND	Loser Race 29 (28)
3RD	Loser Race 27
4TH	Loser Race 26
5TH	Loser Race 23
6TH	Loser Race 24
7TH	Loser Race 21
8TH	Loser Race 22
9TH	Loser Race 16
10TH	Loser Race 17
11TH	Loser Race 18
12TH	Loser Race 15
13TH	Loser Race 14
14TH	Loser Race 13
15TH	Loser Race 12

16 TEAM DOUBLE ELIMINATION

1ST	Winner Race 31 (30)
2ND	Loser Race 31 (30)
3RD	Loser Race 29
4TH	Loser Race 28
5TH	Loser Race 26
6TH	Loser Race 25
7TH	Loser Race 23
8TH	Loser Race 24
9TH	Loser Race 19
10TH	Loser Race 20
11TH	Loser Race 18
12TH	Loser Race 17
13TH	Loser Race 10
14TH	Loser Race 12
15TH	Loser Race 11
16TH	Loser Race 9

4 Team Single Elimination

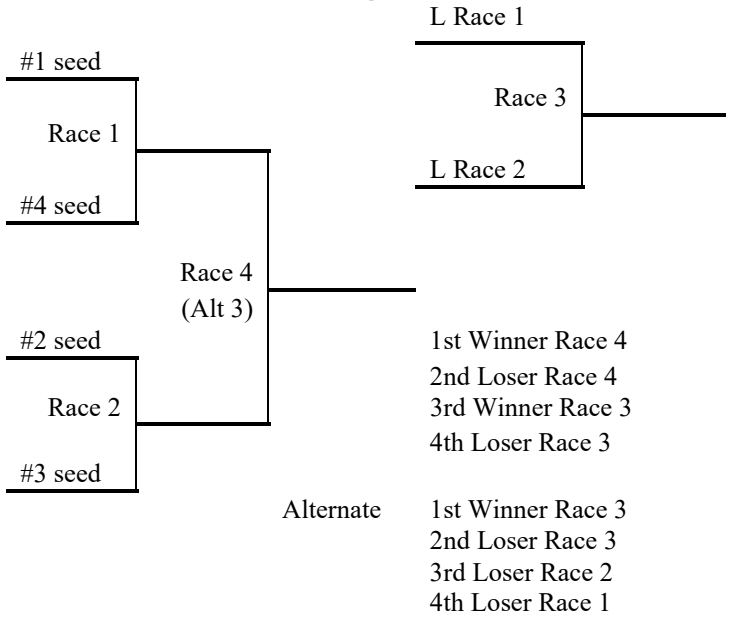

6 Team Single Elimination

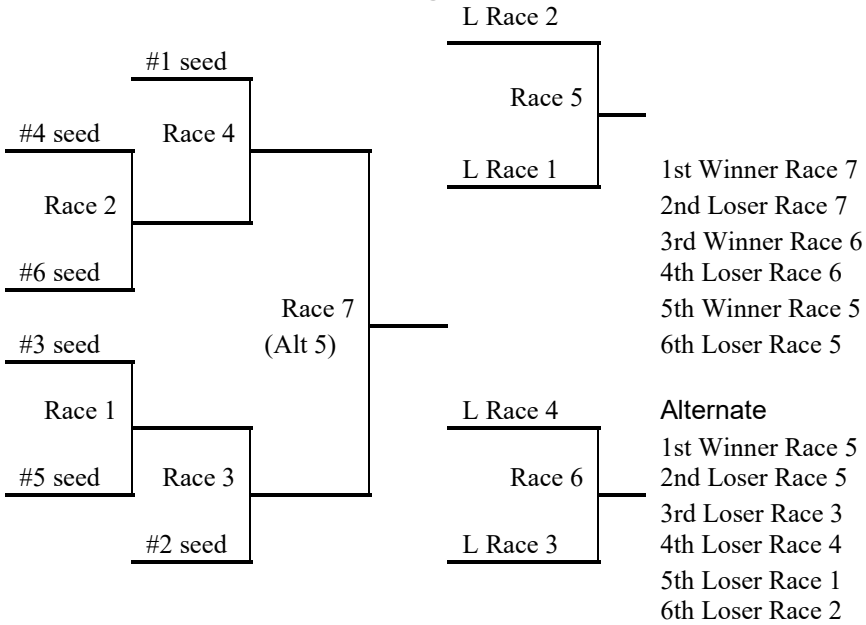

5 Team Single Elimination

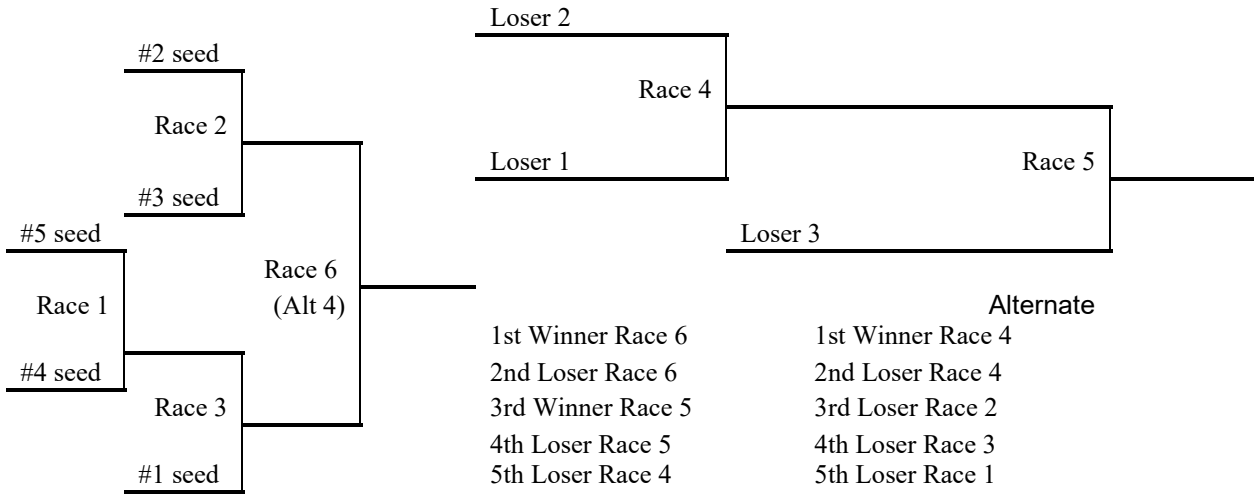

7 TEAM SINGLE ELIMINATION
With Loser Races - All teams guaranteed 2 races

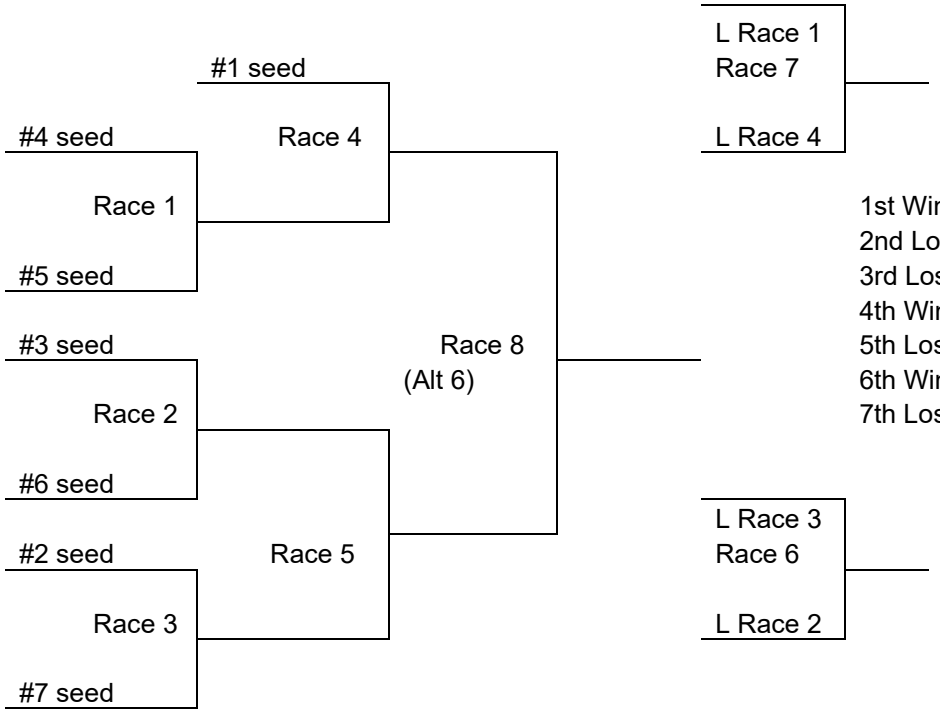

	Alt
1st Winner 8	1st Winner 6
2nd Loser 8	2nd Loser 6
3rd Loser 5	3rd Loser 5
4th Winner 7	4th Loser 4
5th Loser 7	5th Loser 1
6th Winner 6	6th Loser 2
7th Loser 6	7th Loser 3

8 TEAM SINGLE ELIMINATION
With Loser Races - All teams guaranteed 2 races

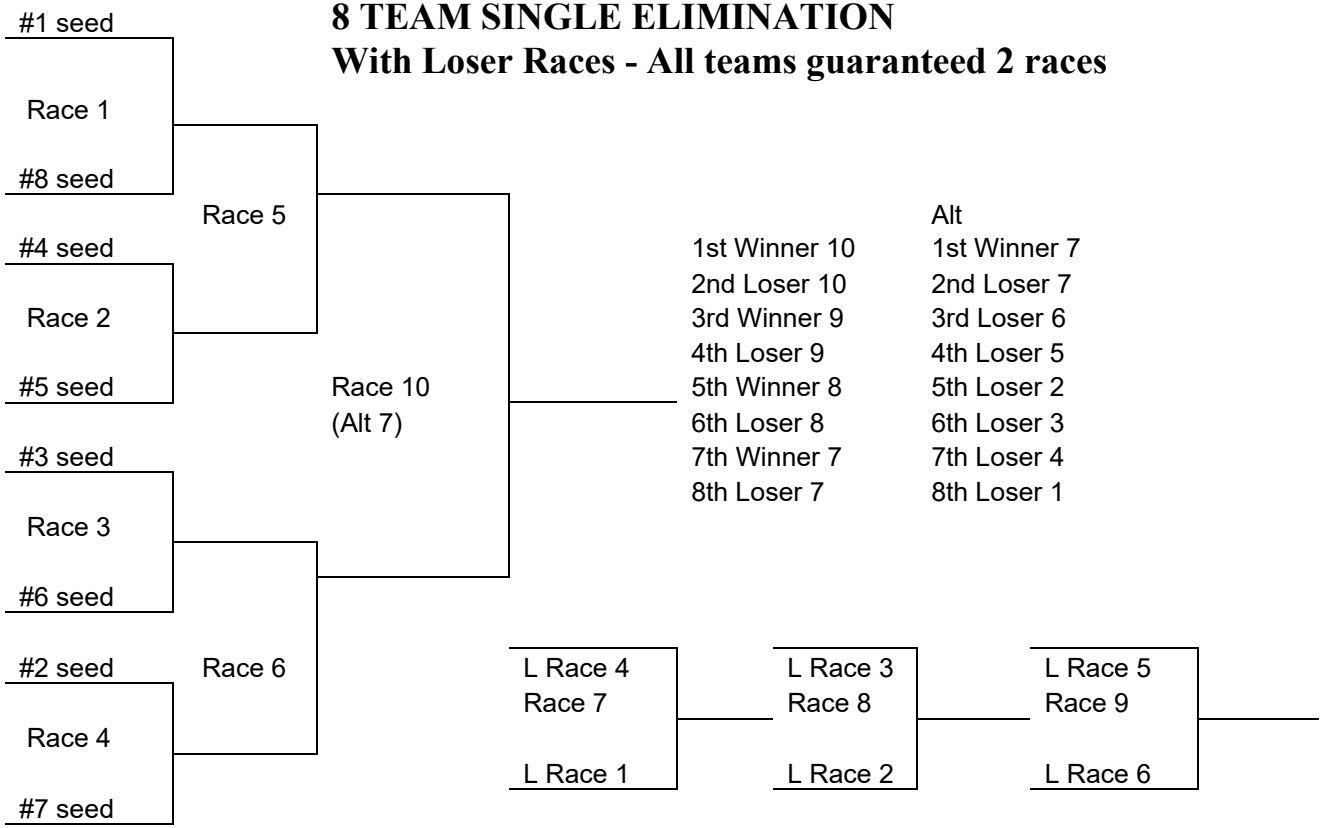

9 Team Single Elimination

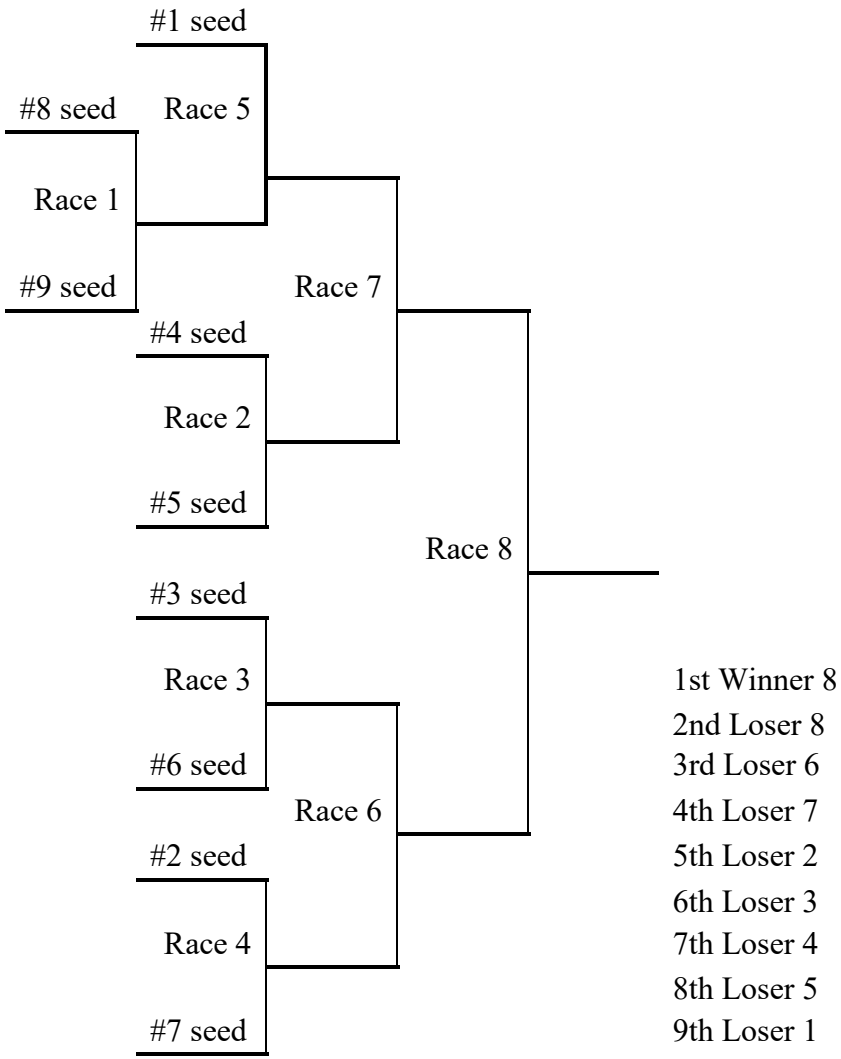

1st Winner 8
2nd Loser 8
3rd Loser 6
4th Loser 7
5th Loser 2
6th Loser 3
7th Loser 4
8th Loser 5
9th Loser 1

10 Team Single Elimination

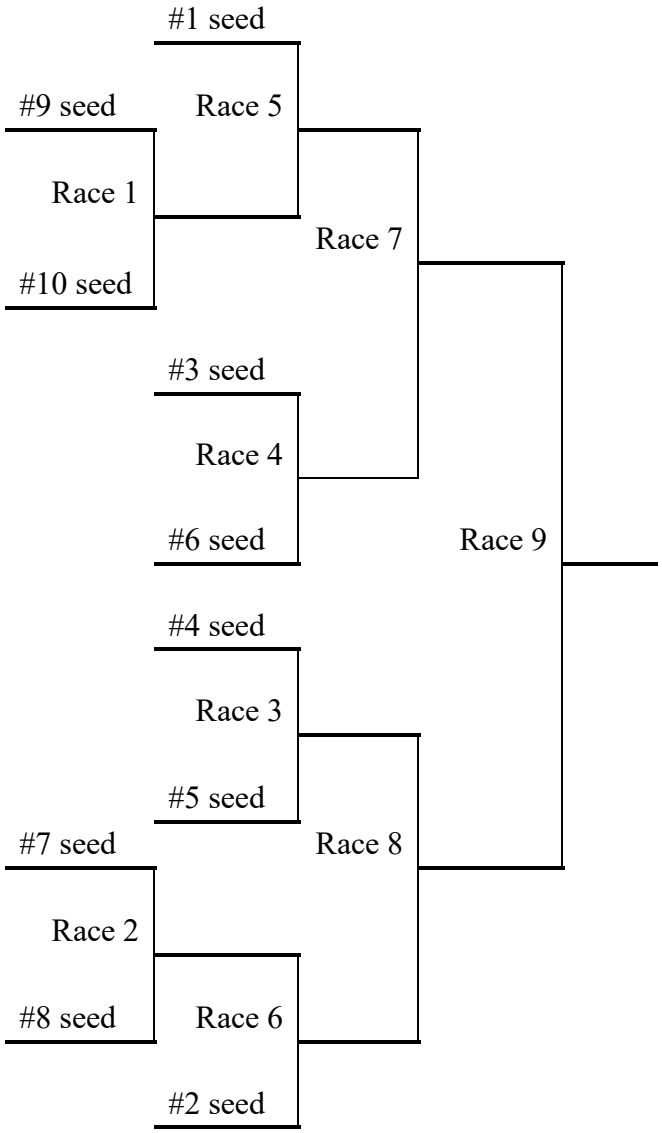

1st Winner 9
2nd Loser 9
3rd Loser 7
4th Loser 8
5th Loser 3
6th Loser 4
7th Loser 6
8th Loser 2
9th Loser 5
10th Loser 1

NORTH AMERICAN FLYBALL ASSOCIATION, INC.®

APPENDIX C

NAFA® Forms

C.1 Tournament Entry Form

Entry for Club: _____

Contact Name: _____Phone: _____ Email: _____

Event# _____ Date: _____

Team	Class	Seed Time	Fee

Total Fee: _____

Additional Events below:

Event# _____ Date: _____

Team	Class	Seed Time	Fee

Total Fee: _____

Event# _____ Date: _____

Team	Class	Seed Time	Fee

Total Fee: _____

Total Fees (all events): _____

NAFA® Rules and Policies

C.1A Limited Tournament Entry Form

Entry for Club: _____

Contact Name: _____Phone: _____ Email: _____

Event# _____ Date: _____

# of Teams	Class	Fee
	Reg	
	Multi	
	Vet	
	Open	
	Other	

Total Fee: _____

Additional Events below:

Event# _____ Date: _____

# of Teams	Class	Fee
	Reg	
	Multi	
	Vet	
	Open	
	Other	

Total Fee: _____

Event# _____ Date: _____

# of Teams	Class	Fee
	Reg	
	Multi	
	Vet	
	Open	
	Other	

Total Fee:_____

Total Fees (all events): _____

NAFA® Event# ________ **NAFA® Rules and Policies** **B/O Time** ________

C.2 Time Sheet 3/5 Format

Tournament ________________ **City, State/Prov.** ________

Judge ________________ **Date** ________

Team ________________ **NAFA® Club#** ________ **Seed Time** ________

Captain ________________ **Phone#** ________

	Dog	Breed	Jump Hgt	Handler/Owner	CRN	(NAFA® use only)
1						
2						
3						
4						
5						
6						
W/U			N/A			

Heat #		Opponent	Dog		
_____ of _____	vs	____________	1 2 3 4 5 6	Time ________	W L T
_____ of _____	vs	____________	1 2 3 4 5 6	Time ________	W L T
_____ of _____	vs	____________	1 2 3 4 5 6	Time ________	W L T
_____ of _____	vs	____________	1 2 3 4 5 6	Time ________	W L T
_____ of _____	vs	____________	1 2 3 4 5 6	Time ________	W L T
_____ of _____	vs	____________	1 2 3 4 5 6	Time ________	W L T
_____ of _____	vs	____________	1 2 3 4 5 6	Time ________	W L T
_____ of _____	vs	____________	1 2 3 4 5 6	Time ________	W L T
_____ of _____	vs	____________	1 2 3 4 5 6	Time ________	W L T
_____ of _____	vs	____________	1 2 3 4 5 6	Time ________	W L T
_____ of _____	vs	____________	1 2 3 4 5 6	Time ________	W L T
_____ of _____	vs	____________	1 2 3 4 5 6	Time ________	W L T
_____ of _____	vs	____________	1 2 3 4 5 6	Time ________	W L T
_____ of _____	vs	____________	1 2 3 4 5 6	Time ________	W L T
_____ of _____	vs	____________	1 2 3 4 5 6	Time ________	W L T
_____ of _____	vs	____________	1 2 3 4 5 6	Time ________	W L T
_____ of _____	vs	____________	1 2 3 4 5 6	Time ________	W L T
_____ of _____	vs	____________	1 2 3 4 5 6	Time ________	W L T
_____ of _____	vs	____________	1 2 3 4 5 6	Time ________	W L T
_____ of _____	vs	____________	1 2 3 4 5 6	Time ________	W L T
_____ of _____	vs	____________	1 2 3 4 5 6	Time ________	W L T
_____ of _____	vs	____________	1 2 3 4 5 6	Time ________	W L T
_____ of _____	vs	____________	1 2 3 4 5 6	Time ________	W L T
_____ of _____	vs	____________	1 2 3 4 5 6	Time ________	W L T
_____ of _____	vs	____________	1 2 3 4 5 6	Time ________	W L T
_____ of _____	vs	____________	1 2 3 4 5 6	Time ________	W L T
_____ of _____	vs	____________	1 2 3 4 5 6	Time ________	W L T
_____ of _____	vs	____________	1 2 3 4 5 6	Time ________	W L T
_____ of _____	vs	____________	1 2 3 4 5 6	Time ________	W L T
_____ of _____	vs	____________	1 2 3 4 5 6	Time ________	W L T
_____ of _____	vs	____________	1 2 3 4 5 6	Time ________	W L T
_____ of _____	vs	____________	1 2 3 4 5 6	Time ________	W L T
_____ of _____	vs	____________	1 2 3 4 5 6	Time ________	W L T
_____ of _____	vs	____________	1 2 3 4 5 6	Time ________	W L T
_____ of _____	vs	____________	1 2 3 4 5 6	Time ________	W L T

Division:________________ **Place:**________ **Best Time :**________

NAFA® Event# _____ **NAFA® Rules and Policies** **B/O Time** _____

C.2 Time Sheet 3/5 Format (2nd page)

Tournament _____ **City, State/Prov.** _____

Team _____ **NAFA® Club#** _____ **Seed Time** _____

	Dog	Breed	Jump Hgt	Handler/Owner	CRN	(NAFA® use only)
1						
2						
3						
4						
5						
6						
W/U			N/A			

Heat #	Opponent	Dog		
_____ of _____	vs _____	1 2 3 4 5 6	Time _____	W L T
_____ of _____	vs _____	1 2 3 4 5 6	Time _____	W L T
_____ of _____	vs _____	1 2 3 4 5 6	Time _____	W L T
_____ of _____	vs _____	1 2 3 4 5 6	Time _____	W L T
_____ of _____	vs _____	1 2 3 4 5 6	Time _____	W L T
_____ of _____	vs _____	1 2 3 4 5 6	Time _____	W L T
_____ of _____	vs _____	1 2 3 4 5 6	Time _____	W L T
_____ of _____	vs _____	1 2 3 4 5 6	Time _____	W L T
_____ of _____	vs _____	1 2 3 4 5 6	Time _____	W L T
_____ of _____	vs _____	1 2 3 4 5 6	Time _____	W L T
_____ of _____	vs _____	1 2 3 4 5 6	Time _____	W L T
_____ of _____	vs _____	1 2 3 4 5 6	Time _____	W L T
_____ of _____	vs _____	1 2 3 4 5 6	Time _____	W L T
_____ of _____	vs _____	1 2 3 4 5 6	Time _____	W L T
_____ of _____	vs _____	1 2 3 4 5 6	Time _____	W L T
_____ of _____	vs _____	1 2 3 4 5 6	Time _____	W L T
_____ of _____	vs _____	1 2 3 4 5 6	Time _____	W L T
_____ of _____	vs _____	1 2 3 4 5 6	Time _____	W L T
_____ of _____	vs _____	1 2 3 4 5 6	Time _____	W L T
_____ of _____	vs _____	1 2 3 4 5 6	Time _____	W L T
_____ of _____	vs _____	1 2 3 4 5 6	Time _____	W L T
_____ of _____	vs _____	1 2 3 4 5 6	Time _____	W L T
_____ of _____	vs _____	1 2 3 4 5 6	Time _____	W L T
_____ of _____	vs _____	1 2 3 4 5 6	Time _____	W L T
_____ of _____	vs _____	1 2 3 4 5 6	Time _____	W L T
_____ of _____	vs _____	1 2 3 4 5 6	Time _____	W L T
_____ of _____	vs _____	1 2 3 4 5 6	Time _____	W L T
_____ of _____	vs _____	1 2 3 4 5 6	Time _____	W L T
_____ of _____	vs _____	1 2 3 4 5 6	Time _____	W L T
_____ of _____	vs _____	1 2 3 4 5 6	Time _____	W L T
_____ of _____	vs _____	1 2 3 4 5 6	Time _____	W L T
_____ of _____	vs _____	1 2 3 4 5 6	Time _____	W L T
_____ of _____	vs _____	1 2 3 4 5 6	Time _____	W L T
_____ of _____	vs _____	1 2 3 4 5 6	Time _____	W L T
_____ of _____	vs _____	1 2 3 4 5 6	Time _____	W L T
_____ of _____	vs _____	1 2 3 4 5 6	Time _____	W L T
_____ of _____	vs _____	1 2 3 4 5 6	Time _____	W L T
_____ of _____	vs _____	1 2 3 4 5 6	Time _____	W L T
_____ of _____	vs _____	1 2 3 4 5 6	Time _____	W L T
_____ of _____	vs _____	1 2 3 4 5 6	Time _____	W L T
_____ of _____	vs _____	1 2 3 4 5 6	Time _____	W L T
_____ of _____	vs _____	1 2 3 4 5 6	Time _____	W L T
_____ of _____	vs _____	1 2 3 4 5 6	Time _____	W L T
_____ of _____	vs _____	1 2 3 4 5 6	Time _____	W L T
_____ of _____	vs _____	1 2 3 4 5 6	Time _____	W L T
_____ of _____	vs _____	1 2 3 4 5 6	Time _____	W L T
_____ of _____	vs _____	1 2 3 4 5 6	Time _____	W L T
_____ of _____	vs _____	1 2 3 4 5 6	Time _____	W L T
_____ of _____	vs _____	1 2 3 4 5 6	Time _____	W L T
_____ of _____	vs _____	1 2 3 4 5 6	Time _____	W L T
_____ of _____	vs _____	1 2 3 4 5 6	Time _____	W L T
_____ of _____	vs _____	1 2 3 4 5 6	Time _____	W L T
_____ of _____	vs _____	1 2 3 4 5 6	Time _____	W L T
_____ of _____	vs _____	1 2 3 4 5 6	Time _____	W L T
_____ of _____	vs _____	1 2 3 4 5 6	Time _____	W L T
_____ of _____	vs _____	1 2 3 4 5 6	Time _____	W L T
_____ of _____	vs _____	1 2 3 4 5 6	Time _____	W L T
_____ of _____	vs _____	1 2 3 4 5 6	Time _____	W L T
_____ of _____	vs _____	1 2 3 4 5 6	Time _____	W L T
_____ of _____	vs _____	1 2 3 4 5 6	Time _____	W L T
_____ of _____	vs _____	1 2 3 4 5 6	Time _____	W L T
_____ of _____	vs _____	1 2 3 4 5 6	Time _____	W L T

C.3 Application for a NAFA Sanctioned Tournament

Submit one application for each event

***=Required Field**

Tournament Name (if any): _____

***Site** Site Name & Street Address: _____

***Venue** City & State/Province: _____ Zip/P.C.: _____

***Host Club(s):** _____ ***NAFA Club #(s):** _____

***Start Date (**MM/DD/YY**):** _____ ***# Days:** _____ ***Closing Date:** _____

Head Judge**:** _____ Judge 2 (if needed): _____

***Entry Fees and Classes offered:** Fees (per team) payable in ☐ US ☐ CAN

***Regular - $**:	_____ per team	☐ Limited to	_____	teams
Multibreed - $:	_____ per team	☐ Limited to	_____	teams
Open - $:	_____ per team	☐ Limited to	_____	teams
Veterans - $:	_____ per team	☐ Limited to	_____	teams
Other _____ :	_____ per team	☐ Limited to	_____	teams

***Tournament Director**		***Entries Chairperson** (if different)	
Name	_____	Name	_____
E-mail Address	_____	E-mail Address	_____
Phone	_____	Phone	_____
City, State/Province	_____	City, State/Province	_____

***Do you want NAFA's Electronic Judging System?** ☐ Yes ☐ No # Requested _____

***EJS Ship To:** Name _____ ***Phone #:** _____

E-mail address _____

Shipping address _____

_____

***Running Surface:** _____ ***Minimum Racing Lane Run-Back:** _____ FT

***Jump Width** ☐ 24" ☐ 30"

***Tournament site governed by Breed Specific Legislation:** ☐ Yes ☐ No If yes, please specify.

_____

_____

***Special Rules, Requests, or comments:**

_____

_____

_____

C.4 Tournament Checklist

_____Select Tournament Committee

___Tournament Chairperson
___Entries Chairperson
___Grounds
___Equipment
___Trophy Chairperson
___Hospitality Chairperson
___Photographer
___Judges
___Publicity
___Admission
___Public Address
___Catalog Chairperson
___Raffle
___Special Events

_____Set entry fee
_____Select and secure site
_____Set date, time and place
_____Determine number of races that can be held in time allowed
_____Determine tournament format
_____Determine schedule
_____Determine number of entries
_____Set the closing date
_____Determine prizes
_____Assemble judging panel
_____Submit application to NAFA®
_____Contact printer for flyers, forms, catalog
_____Mail out flyers
_____Reserve hotel rooms, banquet rooms...
_____Order trophies and ribbons
_____Notify press of the date, time, location and what Flyball involves
_____Secure volunteers for:

___Set Up
___Parking
___Admission
___Raffle
___Cleanup
___Hospitality

Make arrangements for:

___Mats
___Display Board
___Clip Board
___Rulers
___Gating
___Whistles
___Stop Watches
___Signage
___Jumps
___Flags
___50 - 100 Foot Tape
___Tables/Chairs

_____Record entries as they arrive
_____Obtain certificate of additional insured and provide to NAFA® at least 15 days prior to tournament
_____Finalize schedule
_____Review schedule and seeding with your Regional Director
_____Mail entry package to clubs and Judges. Package should include the following:

___Maps of where to stay, where to eat and local points of interest
___Final schedule and seeding

_____Finalize banquet and hotel arrangements
_____Finalize arrangements for a Veterinarian
_____Pay Judges
_____Pick up and deliver equipment, trophies, ribbons
_____Set up ring(s), tables, post signage, gating,...
_____HOLD THE TOURNAMENT!!!
_____Tabulate results and award prizes in a formal award ceremony
_____Clean up the show site
_____Within 14 days, submit full records and tournament recording fee to NAFA®

C.5 Judge's Application

Name: _____ Phone: _____

Address: _____ Fax: _____

City _____ State/Province _____ Zip/Postal _____

E-mail Address: _____

Please provide a brief description of your qualifications:

_____

_____

_____

_____

_____

By signing below, I certify that I meet the initial requirements to begin the training program as set forth in the NAFA® Judges Training Program.

Signature: _____ Date: _____
(/s/ followed by a typed signature can be used for electronic submission)

NAFA® Rules and Policies

Event #_____
Event # _____
Event # _____

C.6 Tournament Results Form

Tournament:_____ Date: _____
Host Club: _____ Host Club #: _____

Region: (Host club's regional affiliation as of start of racing year): _____

Tournament Director: _____ Phone: _____
Address: _____ E-mail: _____
City, State/Province: _____ Zip/Postal Code: _____

Along with this form, the following items must be completed and **electronically** sent to NAFA® within 14 days after the tournament (late fees apply after 14 days).

- ☐ Check here if the entire event was timed using a NAFA Board Approved EJS
- ☐ Bottom of each time sheet (Form C.2) must be completed with division number, best time, and placement
- ☐ Results must be sent electronically:
  - **The host club must retain C.2 time sheets for one year. Remember to enter measuring results.**
- ☐ Jump Height Form(s) (Form C.9)
- ☐ If applicable, include any statements with respect to conduct prejudicial to the sport of NAFA Flyball.
- ☐ If applicable, include any protest(s).
- ☐ If applicable, include Form C.15 Judges Report Form
- ☐ ***No deduction from tournament fees shall be made without prior approval of the executive director.***

NAFA® recording fee is $25 USD per competing team for single day tournaments and $38 USD per competing team for tournaments lasting more than 1 day. When multiple tournaments hosted by the same club occur on successive days, the full fee is due for the tournament with the largest entry and $12 USD per team may be deducted from each additional tournament. Events using NAFA EJS have a $360 USD minimum.

Event #		**# Of Scored Teams**	**Recording Fee (Electronic submission; see above notes)**	**Total Due Per Event (Entries x Fee)**
Largest Entry Event #			$38/$25	
2nd Largest Entry Event #			$38/$13	
3rd Largest Entry Event #			$38/$13	

Fees Remitted	
$	Total Recording Fee(s) due to NAFA from all events as calculated above
$	Late Fees (if applicable)
$	Less Pre-Approved reductions: USD or CDN (circle one)*
$	Total Remitted to NAFA

Canadian hosts can remit payment via interac to PayNafaCA@live.com. (CAD to USD exchange rate used _____)

US teams should pay through the online payment link at the NAFA website.

Forward to: FlyballSanc@yahoo.com
North American Flyball Association, Inc. ®
P.O. Box 171
Palmyra, WI 53156

09/2026

C.7 Regional Director Measuring Worksheet

Date: _____ Event Number: _____
Regional Director: _____ Measuring Official: _____

This form is to be completed at the time of measuring. Any issues or concerns with measuring should be discussed with the Measuring Official before a follow-up is requested.

	CRN	Dog Name	Follow-up Requested	Comments
1.			☐	
2.			☐	
3.			☐	
4.			☐	
5.			☐	

Regional Director Signature: _____

NAFA® Rules and Policies

C.8 Application for a NAFA® Competition Racing # (CRN)

Dogs Name (Call Name): _____ Breed: _____

Owner's Name: _____ Phone#: _____

Address: _____

City: _____ State/Prov: _____ Zip/Postal Code: _____

Dog's Birth Date: _____

E-Mail Address: _____

Name of Dog as you would like it to appear on Awards: _____

Club Number: _____ Club Name: _____

Dogs Name (Call Name): _____ Breed: _____

Owner's Name: _____ Phone#: _____

Address: _____

City: State/Prov: _____ Zip/Postal Code: _____

Dog's Birth Date: _____

E-Mail Address: _____

Name of Dog as you would like it to appear on Awards: _____

Club Number: _____ Club Name: _____

Dogs Name (Call Name): _____ Breed: _____

Owner's Name: _____ Phone#: _____

Address: _____

City: State/Prov: _____ Zip/Postal Code:

Dog's Birth Date: _____ _____

E-Mail Address: _____

Name of Dog as you would like it to appear on Awards: _____

Club Number: _____ Club Name: _____

Check or money order for $40 USD funds made payable to NAFA® Inc. must be enclosed. To:
NAFA® Inc. P.O. Box 171 Palmyra, WI 53156
Please allow 4-6 weeks for processing.

C.9 Jump Heights - for NAFA® Recorded Measurements. Post during the event and return to NAFA®. ☐ **Measuring Official has determined measuring is "For Event Only"**

TOURNAMENT: _____ EVENT# _____

MEASURING OFFICIAL (printed): _____ DATE: _____

CLUB	DOG'S NAME	BREED	DOG'S CRN	WITHERS HEIGHT (Up to 3, circle lowest)	JUMP HGHT	For MO Training/ Certification Only
				, ,		☐
				, ,		☐
				, ,		☐
				, ,		☐
				, ,		☐
				, ,		☐
				, ,		☐
				, ,		☐
				, ,		☐
				, ,		☐
				, ,		☐
				, ,		☐
				, ,		☐
				, ,		☐
				, ,		☐
				, ,		☐

Measuring Official's Signature _____ **Date** _____

Regional Director's Signature _____ **Regional Director (printed)** _____

I, as Regional Director, am a witness to these measurements.

C.10A **Number No Longer Used – Hold for Future Use**

C.11 New Club Registration Form

Requested Club Name _____

Club Owner (Must name Single individual or Corporation as sole Authority with NAFA) _____

Address _____

City _____ State _____

Zip/Postal Code _____ Phone No. _____

E-mail Address _____

Team Contact-if different _____

Address _____

City _____ State _____

Zip/Postal Code _____ Phone No. _____

E-mail Address _____

Please list any CRN Numbers that need to be transferred to this new team

CRN#	Dog's Name	Owner's Name

Use NAFA Form C.8 when requesting new CRN numbers.

Mail completed form with $40 US Funds to: NAFA Inc.; P.O. Box 17, Palmyra, WI 53156

Please allow 2-4 weeks for processing.

NAFA® Rules and Policies

C.12 Notice of Excusal

Type of Excusal: ❒ Aggression ❒ Lame ❒ In Heat ❒ Not Ready for Racing ❒ Code of Ethics ❒ Other

Tournament: _____ Date: _____ Tournament Director:_____

Judge:_____ Regional Director: _____ Region: _____

Dog/Person's Name: _____ CRN: _____ Club/Team Name:_____

For Non-Aggression/Code of Ethics Excusals, Additional Details: _____

_____

For Aggression/Code of Ethics Excusals:

Time of Violation: _____ Race Number: _____ Opposing Club/Team Name: _____

Summary of Violation:_____

_____

Injuries Sustained: _____ Vet Needed? Yes ____ No ____

Witness Name: _____ Phone/Email: _____

Statement:_____

_____

_____

Witness Name: _____ Phone/Email: _____

Statement:_____

_____

_____

Judge's/RD's Observation of Violation: _____

_____

_____

_____

Judge/RD Signature:_____ Date: _____

Owner/Handler Name: _____ Email: _____

Address: _____ Phone: _____

Owner/Handler Signature (acknowledging receipt of form only):_____

Additional Pages maybe used for statements.
NAFA Judge/RD must mail scan and email the completed form to flyball@flyball.org within 10 days. Copies to: Judge, RD, and Owner/Handler.
Aggression excusal process, including appeal procedure, is in Section 5.7 of the Corporate Policies & Procedures. 2/2025

C.13 NAFA® World Record Report Form

SECTION 1: What to do When a Potential World Record has been Achieved

1. Racing should be stopped immediately and not resumed again until SECTIONS 2, 3, and 4 of this form have been completed in ink.
2. The head judge should notify the regional director of the potential world record. Any questions on how to proceed, or about verifying and recording the information, should be directed to the regional director.
3. The executive director must receive the video and C.13 Form within 14 days of the heat in question.

SECTION 2: General Information

Date: _____ Race and Ring Number: _____
Running Surface _____ Head Judge: _____
Regional Director: _____ Tournament Director: _____
Event Number: _____ EJS used (e.g., Red 7) _____
City, State/Province: _____ Host Club Name & NAFA Number: _____

SECTION 3: Team Information (to be completed by head judge)

Potential Record Time: _____ Team Name: _____
Class (circle): Regular / Multibreed Team Captain: _____

	Dog	Breed	Jump Hgt	Handler	CRN
1					
2					
3					
4					

SECTION 4: Checklist for head judge – action items for verification

See SECTION 6 for instructions and Section 7.1 – World Record Times in NAFA® Rules of Racing

- ☐ A. Measure the course:
  - ☐ Racing lane length
  - ☐ Jump placement
  - ☐ Jump height
  - ☐ EJS alignment
- ☐ B. Verify the height dog measurement.
- ☐ C. Check the flyball box:
  - ☐ All sizes of balls used in heat were tested and meet the specs. in Rules of Racing Chapter 1 Section 1.1 (d);
  - ☐ Placement – meets the min. distance from line, box loader stayed in place, and no adjustments were made.

I, as Head Judge, verify that the course, height of the Height Dog, and the flyball box meet NAFA® regulations as specified in Section 7.1 World Record Times in NAFA® Rules of Racing.

Name: _____ Signature: _____ Date: _____

SECTION 5: Video Verification

See SECTION 6 for instructions. The video must be reviewed by two neutral members of the Board of Directors, as per Section 7.1 World Record Times in NAFA® Rules of Racing, and meet the following requirements:

- ☐ A. The video is unedited;
- ☐ B. The video includes a clear view of the following:
  - ☐ Start/finish line,
  - ☐ Sensor poles,
  - ☐ Light tree;
- ☐ C. All passes/exchanges are clean (no infractions);
- ☐ D. The NAFA approved EJS shows no errors or faults;
- ☐ E. Each dog carried their ball over the finish line;
- ☐ F. The heat was timed with a stopwatch when the video was reviewed.

We, as neutral members of the NAFA® Board of Directors, do hereby certify that we have reviewed the video and that it showed the run in question to be in compliance with NAFA® regulations as specified in Section 7.1 World Record Times in NAFA® Rules of Racing. We do hereby certify the new official NAFA® World Record.

Name: _____ Signature: _____ Date: _____
Name: _____ Signature: _____ Date: _____

SECTION 6: Instructions for Checklists (SECTIONS 4 and 5)
See Section 7.1 – World Record Times in NAFA® Rules of Racing.

1. Course, Height Dog, box verification and ball:
   A. Measuring the course:
      1. It is recommended to have the regional director or tournament director assist.
      2. All measurements must meet NAFA® measurement tolerances using a single, continuous tape.
      3. All jumps must be measured for height across the inside width and must be no more than 1/4" lower than the minimum height for the run in question. *No adjustment to jump boards is allowed during or after the heat.*
      4. Jump placement must be within 2" of the jump-set line*. No adjustment to jumps is allowed during or after the heat.*
   B. Verify the Height Dog measurement:
      1. Refer to the NAFA database. The following are acceptable verifications of the Height Dog measurement:
         a. The Height Dog has a Permanent Measurement supporting the jump height used during the heat;
         b. For any Height Dog that does not have a Permanent Measurement (including dogs under 24 months, or any other dog), the NAFA Recorded Measurement, completed at any time during that tournament week, supports the jump height used during the heat;
         c. In all other cases, it is mandatory that the Height Dog:
            i. Be measured in accordance with Chapter 4 Measuring;
            ii. The measurement is completed before the end of the tournament day;
            iii. The measurement supports the jump height used during the heat;
            iv. The measurement is recorded on the C.9 for the event.
   C. Check the flyball box:
      1. Box dimensions must meet the NAFA® regulations. The box must be measured at this time, unless it was previously measured at the tournament.
      2. All sizes of balls used have been tested and verified to meet the specifications in Rules of Racing Chapter 1 Section 1.1 (d);
      3. All portions of the box must be at least 51' from the start/finish line and the following must be confirmed:
         a. The box loader stayed in place (on the box) after the last dog retrieved its ball, until the head judge directed them to leave;
         b. No adjustment to the box was made after the last dog made contact with the box.

   If all of the above requirements are met, the head judge should sign and date the form. It should be given to the team captain so that they can submit it, along with a copy of the video to the executive director.

2. Video verification:
   A. To be considered for a world record an unedited video is mandatory.
   B. The video must be stationary and in line with the start/finish line, with a clear view of the start/finish line, sensor poles, and the light tree.
   C. All passes / exchanges must be clean to qualify for a world record.
   D. The NAFA® Board approved electronic judging system must not show any errors or faults.
   E. All dogs must carry their ball over the finish line.
   F. The heat should be timed with a stopwatch when the video is reviewed. The hand timing is to confirm that the video is of the actual run in question.

   If all of the above requirements are met, both members of the Board of Directors should sign and date the form. A copy of this form must be submitted to the Executive Director within fourteen days in order to have a new official NAFA® World Record.

C.14 Number Not Used – Hold for Future Use

C.15 Judge's Report Form

Host Club: _____

Tournament Director: _____

Tournament Date: _____

Regional Director: _____

Judges Name: _____

Please indicate how you felt about the judge:

Was the judge punctual? _____

Did the judge have a good knowledge of the rules of racing? _____

Was the judge friendly and courteous? _____

Did the judge show confidence in the ring? _____

Did the judge keep a good pace? _____

Did the judge leave the teams and the spectators with the feeling that all teams were given an equal opportunity and no team was given an unfair advantage? _____

Comments: _____

_____

_____

This is an optional form that NAFA® encourages tournament directors to fill out and mail in with their tournament results.

C.16 NAFA® Novice Review Form

Novice Judge Information
Name: _____ Address: _____
City: _____ State/Prov: _____ Zip/PC: _____
Home Phone: _____ Work Phone: _____ Cell Phone: _____
E-mail address: _____

Box Judging (may be completed under supervising or approved judge):
Date: _____ Sponsoring Team: _____
Location: _____ Supervising Judge (print): _____

Comments on Performance of Duties (to be completed by the supervising judge)
_____
_____
_____

Performance was satisfactory to complete assignment: Yes _____ No _____

Judge's Signature: _____

Line Judging (may be completed under supervising or approved judge):
Date: _____ Sponsoring Team: _____
Location: _____ Supervising Judge (print): _____

Comments on Performance of Duties (to be completed by the supervising judge)
_____
_____
_____

Performance was satisfactory to complete assignment: Yes _____ No _____

Judge's Signature: _____

Observational Assignment:
Date: _____ Sponsoring Team: _____
Location: _____ Supervising Judge (print): _____

Comments on Performance of Duties (to be completed by the supervising judge)
_____
_____
_____

Performance was satisfactory to complete assignment: Yes _____ No _____

Supervising Judge's Signature: _____

Table Assignment (may be completed under supervising or approved judge):

Date: _____ Sponsoring Team: _____
Location: _____ Supervising Judge (print): _____

Comments on Performance of Duties (to be completed by the supervising judge)

_____
_____
_____

Performance was satisfactory to complete assignment: Yes _____ No _____

Judge's Signature: _____

Measuring Training (assignment 1 - may be completed under supervising or approved judge):

Date: _____ Sponsoring Team: _____
Location: _____ Supervising Judge (print): _____

Comments on Performance of Duties (to be completed by the supervising judge)

_____
_____
_____

Performance was satisfactory to complete assignment: Yes _____ No _____

Supervising Judge's Signature: _____

Measuring Training (assignment 2 - may be completed under supervising or approved judge):

Date: _____ Sponsoring Team: _____
Location: _____ Supervising Judge (print): _____

Comments on Performance of Duties (to be completed by the supervising judge)

_____
_____
_____

Performance was satisfactory to complete assignment: Yes _____ No _____

Supervising Judge's Signature: _____

Measuring Training (assignment 3 – must be completed with supervising judge or NAFA® certified measuring judge):

Date: _____ Sponsoring Team: _____
Location: _____ Supervising Judge (print): _____

Comments on Performance of Duties (to be completed by the supervising judge)

_____
_____
_____

Performance was satisfactory to complete assignment: Yes _____ No _____

Supervising Judge's Signature: _____

NAFA® Rules and Policies

C.17 **NAFA® Apprentice Judge Review Form** (To be completed by supervising judge)

Apprentice Judge Information

Name: _____ Address: _____

City: _____ State/Prov: _____ Zip/PC: _____

Home Phone: _____ Work Phone: _____ Cell phone: _____

E-mail address: _____

Supervising Judge: _____

Note: Must be on NAFA® list of approved supervising judges

Tournament Information

Date: _____ Sponsoring Team: _____

Location: _____ Tournament Director: _____

Tournament Director Information

Address: _____

City: _____ State/Prov: _____ Zip/PC: _____

Phone: _____

E-mail address: _____

Number of Races Judged (minimum 25) _____ **Number of Dogs Measured** _____

Judging Start Time: _____ Judging End Time: _____

Manual Start : _____ EJS Start: _____

Please rate the apprentice judge on the following rating scale of 1 to 5 with 1 rating poor and 5 rating excellent.

Appearance	1	2	3	4	5
Knowledge of NAFA® Rules & Policies	1	2	3	4	5
Control of Ring	1	2	3	4	5
Attitude to Exhibitors & Officials	1	2	3	4	5
Measuring Dogs	1	2	3	4	5
Style	1	2	3	4	5

Comments: _____

_____

_____

Areas for Improvement: _____

_____

Recommendations:

- ☐ Satisfactory Completion of Assignment
- ☐ Do Not Recommend

Please note:

Only applications with completed information will be reviewed. At the first meeting after its receipt, your application will be reviewed by the NAFA® Board of Directors. Within 10 days following the meeting, you will be informed of the Board's decision by the head of the NAFA® Judges Committee.

Once this form has been completed, it should be returned to the apprentice judge. When three approvals have been collected, the apprentice should email all three review forms to the NAFA Judges Committee: judges@flyball.org

C.18 NAFA® Provisional Judge Review Form (To be completed by tournament director & regional director)

Provisional Judge Information

Name: _____ Address: _____

City: _____ State/Prov: _____ Zip/PC: _____

Home Phone: _____ Work Phone: _____ Cell phone: _____

E-mail address: _____

Tournament Information

Date: _____ Sponsoring Team: _____

Location: _____ Tournament Director: _____

Tournament Director Information / Regional Director Information (please circle which one)

Name (TD or RD): _____

Address: _____

City: _____ State/Prov: _____ Zip/PC: _____

Phone: _____

E-mail address: _____

Number of Races Judged (minimum 25) _____ **Number of Dogs Measured** _____

Judging Start Time: _____ Judging End Time: _____

Manual Start : _____ EJS Start: _____

Please rate the provisional judge on the following rating scale of 1 to 5 with 1 rating poor and 5 rating excellent.

Appearance	1	2	3	4	5
Knowledge of NAFA® Rules & Policies	1	2	3	4	5
Control of Ring	1	2	3	4	5
Attitude to Exhibitors & Officials	1	2	3	4	5
Measuring Dogs	1	2	3	4	5
Style	1	2	3	4	5

Additional Comments: _____

_____

_____

Areas for Improvement: _____

_____

Recommendations:

- ☐ Satisfactory Completion of Assignment
- ☐ Do Not Recommend

Please note:

Only applications with completed information will be reviewed. At the first meeting after its receipt, your application will be reviewed by the NAFA® Board of Directors. Within 10 days following the meeting, you will be informed of the Board's decision by the head of the NAFA® Judges Committee.

Once this form has been completed, it should be returned to the provisional judge. When five approvals have been collected, the provisional judge should email all five review forms to the NAFA Judges Committee: judges@flyball.org

NAFA® Rules and Policies

C. 19 Application for NAFA® Supervising Head Judge

Date of application: _____ Date received by NAFA®: _____

Applicant Information:

Name: _____ Address: _____

City: _____ State/Prov: _____ Zip/PC: _____

Home Phone: _____ Work Phone: Cell phone: _____

E-mail address: _____ Applicant's home region: _____

Applicant's signature: _____

1. Amount of time applicant has been:

a. Involved in the sport of flyball: _____

b. As a NAFA® approved judge: _____

2. Please list the following information on a separate document:

a. A minimum of 25 tournaments that you have judged, on separate weekends, since being an approved judge. Please include the date, host team, tournament director, regional director, city, state, and amount of judging completed for each event. It is also important that you indicate at which of these tournaments you measured dogs.

b. Any disciplinary, probation or suspension actions that you have been involved in while participating in flyball either as a competitor or judge.

3. Please attach original copies of the following documents:

a. Signed letter of endorsement from the regional director of your home region.

b. Signed letter of endorsement from your 5 tournament directors for which you judged as an approved judge.

c. Signed letter of endorsement from 2 NAFA® approved judges with whom you have judged.

My goals should I be approved as a NAFA® supervising head judge are as follows:

_____

_____

_____

Please submit your application to:

judges@flyball.org

Please note:

Only applications with completed information will be reviewed. At the first meeting after its receipt, your application will be reviewed by the NAFA® Board of Directors. Within 10 days following the meeting, you will informed of the Board's decision by the head of the NAFA® Judges Committee.

NAFA® Use only

Presiding Head of Judging Committee: _____

Date: _____ Approved: _____ Rejected: _____

C.20 **Number Not Used – Hold for Future Use**

C.21 **Number Not Used – Hold for Future Use**

C.22 Breed Challenge Form

Challenged Dog

Dog's Name: _____ CRN: _____
Breed declaration being challenged:_____

Date of Change in Challenged Dog's Breed Designation: _____

Basis for Challenge and Supporting Statements or Documentation (attach additional pages if needed):

_____
_____
_____
_____
_____

Mail to NAFA®, 1288 N Summit Ave, Ste 107-195, Oconomowoc, WI 53066-4466

Below for NAFA® Use Only

Date Received: _____ Fee Included ($100 USD): Y N Challenge Allowed: Y N
Dog Owner & Challenger Notified of Breed Challenge on: _____
30 Days for Owner to Respond Ends: _____
Extension for Owner to Respond Requested On: _____ Extension Granted: Y N
Owner Response Date, As Extended: _____

Owner Response:
Declared Breed Established By: Pedigree Y N ILP/PAL Y N
(copy of pedigree or ILP/PAL attached to this form)
Challenge Conceded: Y N If conceded, new CRN breed designation and date:_____
NAFA® Breed Review Requested: Y N Date of Breed Review Request:_____
Submission complete: Y N Adequate front and sides photographs: Y N Five Packets: Y N
Owner Notified of Deficiencies in Submission and Date to Cure:_____
Names and Qualifications of Breed Panel Members_____
_____
_____

Challenged Dog's Owner:_____
Email: _____
Phone: _____

Final Findings: Challenge Rejected, Breed Remains as Declared ☐ Challenge Accepted, Dog Not Declared Breed ☐
Final Notifications: ED Notified Dog Owner _____

NORTH AMERICAN FLYBALL ASSOCIATION, INC.®

APPENDIX D

NAFA® Judges Training Program

NAFA® Judges Training Program

Introduction

The NAFA® Rules of Racing (RR) and Corporate Policies & Procedures (CP&P) Manuals are designed to ensure fair and equal treatment for all competitors. As a NAFA judge, you are authorized to enforce and uphold the rules within the NAFA rule book. As a representative of NAFA, you are required to represent NAFA in a positive manner while discharging your duties. Being friendly, courteous, diplomatic, fair and impartial are all required qualities necessary to represent NAFA.

The manual outlines numerous rules and policies that NAFA judges need to ensure are adhered to, but there are two basic premises that all judges should keep in mind at all times:

I. NAFA is founded on fairness and sportsmanship! A judge must leave exhibitors and spectators with the feeling that each team was given an equal opportunity and no team was given an unfair advantage.
II. The safety and well-being of the dogs and exhibitors shall be foremost.

Code of Conduct

As a representative of NAFA, a judge's behavior and appearance reflect upon NAFA, the host club and the sport in general and should be professional at all times. Being professional includes, but is not limited to the following:

- The judge is expected to be friendly to all competitors.
- Questions posed by exhibitors or spectators should be answered thoroughly in a courteous and respectful manner.
- The judge should be sympathetic to the needs of the competitors, but firm in enforcing the Rules of Racing and Corporate Policies & Procedures of NAFA®.
- A judge must leave exhibitors and spectators with the feeling that each team was given an equal opportunity and no team was given an unfair advantage
- To prevent the perception of 'favoritism', the head Judge should not wear any item that shows team affiliation during the discharge of their duties. (It is highly encouraged, but not required, that relief judges do not wear team apparel while judging.)
- A judge should refrain from engaging in heated debates with disgruntled exhibitors. At no time during a judging assignment, should a judge lose his or her temper with an exhibitor or use foul language with anyone.
- At no time during a judging assignment should a Judge consume alcohol.

Requirements to Begin the Training Program

Initial requirements to begin the training program are:

1. The individual must be in good standing with NAFA®
2. The individual must be at least 18 years of age
3. The individual must possess a current copy of the NAFA® Rules of Racing and Corporate Policies & Procedures Manual

The individual should submit a completed form C.5 to the NAFA Judges Committee to obtain approval to begin the novice program. Assignment evaluation forms are located at C.16.

Time between Assignments at Different Levels

Assignments undertaken at different levels of the training program must occur during separate tournament weeks.

NOVICE JUDGE:

Overview:

During NAFA sanctioned tournaments, any decisions rendered by a NAFA approved judge are considered "final" when they concern infractions that occurred during racing or are violations of the NAFA Corporate Policies and Procedures. Managing that authority responsibly requires a thorough understanding of all duties of a NAFA judge.

Novice judges must be committed to learning the necessary information and skills before becoming a NAFA approved judge.

Assignments:

- ❑ Box judging assignment
- ❑ Line judging assignment
- ❑ Observational assignment
- ❑ Measuring training
- ❑ Table assignment
- ❑ Completion of the exams

Box Judging:

The novice judge is required to box judge a minimum of 10 races under a supervising or approved judge.

Learning objectives:

- ➢ Knowledge of the responsibilities of the box judge *(RR Ch. 5 a – c)*
- ➢ Identification of all infractions signaled by the box judge *(RR Ch. 8.3 h)*

Line Judging:

The novice judge is required to line judge a minimum of 25 races under a supervising or approved judge.

Learning objectives:

- ➢ Knowledge of the responsibilities of the line judge *(RR Ch. 5 a-d)*
- ➢ Identification of all infractions signaled by the line judge *(RR Ch. 8.3 h)*
- ➢ Familiarization with the C.2 form and responsibilities of the line judge in relation to that form *(Appendix C)*

Observational Assignment:

The novice judge is required to observe a supervising judge perform the head judge duties for a minimum of 25 races.

Learning objectives:

- Set-up, function and testing of the Electronic Judging System (EJS)
- Ensuring all equipment is within expected standards (racing lanes, jumps and boxes) *(RR Ch. 1.1 b-e, 1.2, 2.2, 2.3 a-b, 2.4 a)*
- Familiarization of relationship between line judge, box judge, scoring table and head judge *(RR Ch. 5 a-h)*
- Observation of interaction between the head judge and competitors
- Identification of infractions signaled by the supervising judge and how the action of the dog or handler being signaled violated the Rules of Racing *(RR Ch 6-8)*

Measuring Training:

The novice judge is required to complete measuring official training for novice judges in *CP&P Ch. 2.3*.

Learning objectives:

- Understand rules governing measuring *(RR Ch. 4)*
- Understand proper set-up of the NAFA Measuring Apparatus
- Identify a proper stand as outlined in the NAFA rule book *(RR Ch. 4)*
- Identify the proper place on the dog (withers) to take the measurement *(RR Ch. 4)*
- Demonstrate a proper rapport with the dog being measured
- Demonstrate ability to read the measurement on the NAFA Measuring Apparatus properly

Table Assignment:

The novice judge is required to work the scoring table for a minimum of 25 races under a supervising or approved judge.

Learning Objectives:

- Familiarization with procedures used to record times for a tournament
- Familiarization with process of assigning times for heats when interference occurs *(RR Ch. 8.3 f)*
- Familiarization with a properly documented C.2 form *(Appendix C)*
- Familiarization of the interaction between the scoring table and head judge

Judge's Examinations:

After completing the assignments lists above, the novice judge should submit the following to the NAFA Judges Committee:

1. The completed C.16 indicating satisfactory completion of all assignments.

2. A list of all items/infractions that a line judge and box judge must observe for while carrying out their duties.
3. A written essay covering how to set up the NAFA Measuring Apparatus and an explanation of what is considered an acceptable stand as described in the NAFA® Rules of Racing & Corporate Policies and Procedures Manual.

Upon receipt of the above items, the Judges Committee will forward the applicant the Novice Judge's Examination. A passing score on the exam is 80%.

Objective of the Novice Judge's Examination:

- Ensure that the novice judge has a thorough knowledge of the NAFA® Rules of Racing & Corporate Policies and Procedures Manual and the duties of all judges working the ring at events sanctioned by the North American Flyball Association. *(RR Ch. 1 – 8)*

Criteria for Advancement to Apprentice Judge Status:

The novice judge has one year to complete the novice judge assignments and to apply for promotion to apprentice judge status.

The novice judge will be promoted to the level of apprentice judge upon satisfactory completion of all assignments. From the date of promotion, the apprentice judge has one year to complete the apprentice judge assignments and to apply for promotion to provisional judge status.

Failure to complete any portion of the novice judge's training program to the satisfaction of the Judges Committee will result in additional assignments being required of the novice judge prior to promotion. The number and nature of the additional assignments are at the discretion of the Judges Committee and will be designed to remediate any area of expertise deemed to be lacking by the novice judge.

APPRENTICE JUDGE:

Overview

The apprentice judge is expected to have a thorough understanding of the duties of all judges working at a tournament and of the NAFA® Rules of Racing and Policies & Procedures Manual. Under the supervision of a NAFA® appointed supervising judge, the apprentice judge will demonstrate their knowledge of the rules and ability to apply them while judging a NAFA® sanctioned event.

Assignments:

- ❑ Judge a minimum of 25 races at three different tournaments on different tournament weeks under under a minimum of two different NAFA supervising judges. The supervising judges must be from different regions; however, one may be from the same region as the apprentice judge.
- ❑ Complete measuring official training for apprentice judges in CP&P 2.3

Learning Objective:

- Ability to accurately set up the NAFA Measuring Apparatus and measure dogs
- Ability to identify and signal infractions as outlined in the NAFA Rules of Racing & Policies & Procedures Manual
- Ability to explain the nature of infractions to competitors
- Ability to control the racing ring
- Ability to interact appropriately with exhibitors
- Development of personal judging style

Evaluation Procedure:

The apprentice judge will be evaluated by the NAFA supervising judge on their ability to perform the functions of a NAFA judge. At each assignment, a C.17 evaluation form will be completed by the NAFA supervising judge.

Criteria for Promotion to Provisional Judge Status:

The newly promoted apprentice judge has 12 months to complete the apprentice judge assignments and apply for promotion to provisional status.

Once all assignments have been completed, the apprentice judge will forward all forms and all C.17 evaluations to the NAFA Judges Committee for consideration of promotion to provisional judge status. The committee will consider the application and make a recommendation to the NAFA Board of Directors regarding promotion. The chairman of the Judges Committee will notify the applicant of the decision of the NAFA Board of Directors.

Failure to complete any portion of the apprentice judge's training program to the satisfaction of the Board of Directors will result in additional assignments being required of the apprentice judge prior to promotion. The number and nature of the additional assignments are at the discretion of the Board of Directors and will be designed to remediate any area of expertise deemed to be lacking by the apprentice judge.

PROVISIONAL JUDGE:

The provisional judge is to demonstrate the ability to perform the functions of a NAFA approved judge without supervision.

Assignments:

- Judge a minimum of 25 races on five different weekends. Must judge a minimum of 40 races during one of those assignments. It is highly recommended that these assignments be completed in a minimum of two separate regions.
- Complete measuring official training for provisional judges in CP&P 2.3
- Receive a C.18 evaluation form from both the regional director and tournament director from each assignment
- After completion of all assignments obtain a Letter of Recommendation for Promotion from a NAFA approved or supervising judge.

Learning Objective:

- Ability to perform the functions of a NAFA approved judge without relying on the immediate input that is provided by a supervising judge.
- Establish a confident ring presence while managing the racing at a NAFA sanctioned tournament.

Criteria for Promotion to Approved Judge Status:

The newly appointed provisional judge has eighteen months from the date of promotion to complete the provisional judge assignments and apply for promotion to approved judge status.

Once all assignments have been completed, the provisional judge will forward all forms, Letter of Recommendation and all C.18 evaluations to the NAFA Judges Committee for consideration of promotion to approved judge status. The committee will consider the application and make a recommendation to the NAFA Board of Directors regarding promotion. The chairman of the NAFA Judges Committee will notify the applicant of the decision of the NAFA Board of Directors.

Failure to complete any portion of the provisional judge's training program to the satisfaction of the Board of Directors will result in additional assignments being required of the provisional judge prior to promotion. The number and nature of the additional assignments are at the discretion of the Board of Directors and will be designed to remediate any area of expertise deemed to be lacking by the provisional judge.

NORTH AMERICAN FLYBALL ASSOCIATION, INC.®

APPENDIX D

Subsection 2

NAFA® Judges Training Program

Judges from other Organizations

NAFA® Judges Training Program Judges from other Organizations

Introduction

The NAFA® Rules of Racing (RR) and Corporate Policies & Procedures (CP&P) Manuals are designed to ensure fair and equal treatment for all competitors. As a NAFA judge, you are authorized to enforce and uphold the rules within the NAFA rule book. As a representative of NAFA, you are required to represent NAFA in a positive manner while discharging your duties. Being friendly, courteous, diplomatic, fair and impartial are all required qualities necessary to represent NAFA.

The manual outlines numerous rules and policies that NAFA judges need to ensure are adhered to, but there are two basic premises that all judges should keep in mind at all times:

I. NAFA is founded on fairness and sportsmanship! A judge must leave exhibitors and spectators with the feeling that each team was given an equal opportunity and no team was given an unfair advantage.
II. The safety and well-being of the dogs and exhibitors shall be foremost.

Code of Conduct

As a representative of NAFA, a judge's behavior and appearance reflect upon NAFA, the host club and the sport in general and should be professional at all times. Being professional includes, but is not limited to the following:

- The judge is expected to be friendly to all competitors.
- Questions posed by exhibitors or spectators should be answered thoroughly in a courteous and respectful manner.
- The judge should be sympathetic to the needs of the competitors, but firm in enforcing the Rules of Racing and Corporate Policies & Procedures of NAFA®.
- A judge must leave exhibitors and spectators with the feeling that each team was given an equal opportunity and no team was given an unfair advantage
- To prevent the perception of 'favoritism', the head Judge should not wear any item that shows team affiliation during the discharge of their duties. (It is highly encouraged, but not required, that relief judges do not wear team apparel while judging.)
- A judge should refrain from engaging in heated debates with disgruntled exhibitors. At no time during a judging assignment, should a judge lose his or her temper with an exhibitor or use foul language with anyone.
- At no time during a judging assignment should a Judge consume alcohol.

Requirements to Begin the Training Program

Initial requirements to begin the training program are:

1. The individual must be in good standing with NAFA®
2. The individual must be at least 18 years of age
3. The individual must possess a current copy of the NAFA® Rules of Racing and Corporate Policies & Procedures Manual
4. The individual must have been an Approved Judge status equivalent or higher in one of the following NAFA approved flyball organizations for a minimum of two (2) years (24 months):
   - Australian Flyball Association
   - European Flyball Association
   - UK Flyball League
   - United Flyball League International
5. The individual should submit a completed form C.5 to the NAFA Judges Committee to obtain approval to begin the novice program.

Time between Assignments at Different Levels

Assignments undertaken at different levels of the training program must occur during separate tournament weeks.

NOVICE JUDGE:

Overview:

Assignments:

- ❑ Observational assignment
- ❑ Measuring training
- ❑ Completion of the exams

Observational Assignment:

The novice judge is required to observe a supervising judge perform the judge duties for a minimum of 25 races.

Learning objectives:

- ➢ Set-up, function and testing of the Electronic Judging System (EJS)
- ➢ Ensuring all equipment is within expected standards (racing lanes, jumps and boxes) (RR Ch. 1.1 b-e, 1.2, 2.2, 2.3 a-b, 2.4 a)
- ➢ Familiarization of relationship between line judge, box judge, scoring table and head judge (RR Ch. 5 a-h)
- ➢ Observation of interaction between the head judge and competitors
- ➢ Identification of infractions signaled by the supervising judge and how the action of the dog or handler being signaled violated the Rules of Racing (RR Ch 6-8)

Measuring Training:

The novice judge is required to complete measuring official training through Novice Judge 2.3(d)(ii) located in Chapter 2 Section 2.3 - Measuring Official Status in CP&P.

Learning objectives:

- ➢ Understand rules governing measuring (RR Ch. 4)
- ➢ Understand proper set-up of the NAFA Measuring Apparatus
- ➢ Identify a proper stand as outlined in the NAFA rule book (RR Ch. 4)
- ➢ Identify the proper place on the dog (withers) to take the measurement (RR Ch. 4)
- ➢ Demonstrate a proper rapport with the dog being measured
- ➢ Demonstrate ability to read the measurement on the NAFA Measuring Apparatus properly

Judge's Examinations:

After completing the assignments listed above, the novice judge should submit the following to the NAFA Judges Committee:

1. The completed C.16 indicating satisfactory completion of all assignments.
2. A written essay covering how to set up the NAFA Measuring Apparatus and an explanation of what is considered an acceptable stand as described in the NAFA® Rules of Racing & Corporate Policies and Procedures Manual.
3. A written essay covering the differences between two organizations' rules.

Upon receipt of the above items, the Judges Committee will forward the applicant the Novice Judge's Examination. A passing score on the exam is 80%.

Objective of the Novice Judge's Examination:

- ➢ Ensure that the novice judge has a thorough knowledge of the NAFA® Rules of Racing & Corporate Policies and Procedures Manual and the duties of all judges working the ring at events sanctioned by the North American Flyball Association. (RR Ch. 1 – 8)

Criteria for Advancement to Apprentice Judge Status:

The novice judge has one year to complete the novice judge assignments and to apply for promotion to apprentice judge status.

The novice judge will be promoted to the level of apprentice judge upon satisfactory completion of essays and exam. From the date of promotion, the apprentice judge has one year to complete the apprentice judge assignments and to apply for promotion to provisional judge status.

Failure to complete any portion of the novice judge's training program to the satisfaction of the Judges Committee will result in additional assignments being required of the novice judge prior to promotion. The number and nature of the additional assignments are at the discretion of the Judges Committee and will be designed to remediate any area of expertise deemed to be lacking by the novice judge.

APPRENTICE JUDGE:

Overview

The apprentice judge is expected to have a thorough understanding of the duties of all judges working at a tournament and of the NAFA® Rules of Racing and Policies & Procedures Manual. Under the supervision of a NAFA® appointed supervising judge, the apprentice judge will demonstrate their knowledge of the rules and ability to apply them while judging a NAFA® sanctioned event.

Assignments:

- Judge a minimum of 25 races at two different tournaments on different tournament weeks under a minimum of two different NAFA supervising judges. and get "satisfactory completion" marks on a C.17 for those two assignments
- Complete measuring official training for apprentice judges in CP&P 2.3. The requirement to measure dogs may be completed in two assignments as long as the apprentice judge measures a minimum of 12 dogs at each assignment.

Learning Objective:

- Ability to accurately set up the NAFA Measuring Apparatus and measure dogs
- Ability to identify and signal infractions as outlined in the NAFA Rules of Racing & Policies & Procedures Manual
- Ability to explain the nature of infractions to competitors
- Ability to control the racing ring
- Ability to interact appropriately with exhibitors
- Development of personal judging style

Evaluation Procedure:

The apprentice judge will be evaluated by the NAFA supervising judge on their ability to perform the functions of a NAFA judge. At each assignment, a C.17 evaluation form will be completed by the NAFA supervising judge.

Criteria for Promotion to Provisional Judge Status:

The newly promoted apprentice judge has 12 months to complete the apprentice judge assignments and apply for promotion to provisional status.

Once all assignments have been completed, the apprentice judge will forward all forms and all C.17 evaluations to the NAFA Judges Committee for consideration of promotion to provisional judge status. The committee will consider the application and make a recommendation to the NAFA Board of Directors regarding promotion. The chairman of the Judges Committee will notify the applicant of the decision of the NAFA Board of Directors.

Failure to complete any portion of the apprentice judge's training program to the satisfaction of the Board of Directors will result in additional assignments being required of the apprentice judge prior to promotion. The number and nature of the additional assignments are at the discretion of the Board of Directors and will be designed to remediate any area of expertise deemed to be lacking by the apprentice judge.

PROVISIONAL JUDGE:

The provisional judge is to demonstrate the ability to perform the functions of a NAFA approved judge without supervision.

Assignments:

- Judge a minimum of 25 races on five different weekends. Must judge a minimum of 40 races during one of those assignments. It is highly recommended that these assignments be completed in a minimum of two separate regions.
- Complete measuring official training for provisional judges in CP&P 2.3.
- Receive a C.18 evaluation form from both the regional director and tournament director from each assignment
- After completion of all assignments obtain a Letter of Recommendation for Promotion from a NAFA approved or supervising judge.

Learning Objective:

- Ability to perform the functions of a NAFA approved judge without relying on the immediate input that is provided by a supervising judge.
- Establish a confident ring presence while managing the racing at a NAFA sanctioned tournament.

Criteria for Promotion to Approved Judge Status:

The newly appointed provisional judge has eighteen months from the date of promotion to complete the provisional judge assignments and apply for promotion to approved judge status.

Once all assignments have been completed, the provisional judge will forward all forms, Letter of Recommendation and all C.18 evaluations to the NAFA Judges Committee for consideration of promotion to approved judge status. The committee will consider the application and make a recommendation to the NAFA Board of Directors regarding promotion. The chairman of the NAFA Judges Committee will notify the applicant of the decision of the NAFA Board of Directors.

Failure to complete any portion of the provisional judge's training program to the satisfaction of the Board of Directors will result in additional assignments being required of the provisional judge prior to promotion. The number and nature of the additional assignments are at the discretion of the Board of Directors and will be designed to remediate any area of expertise deemed to be lacking by the provisional judge